16-Channel, 14-Bit, 500 MHz ADC Module

The University of Chicago

Mircea Bogdan
March 14, 2023

16-Channel,14-Bit, 500MHz ADC Board

Populated two Modules

- One module with just two ADC chips
- One module with 8 ADC chips

Fix of the LDO schematic problem

Eliminated the 2.5V LDOs, and installed new LDOs for 2.5V – analog supply for ADCs

Eliminated the 1.25V LDOs.

Changed DC/DC from 1.8V to 1.25V, and used it as analog supply for ADCs

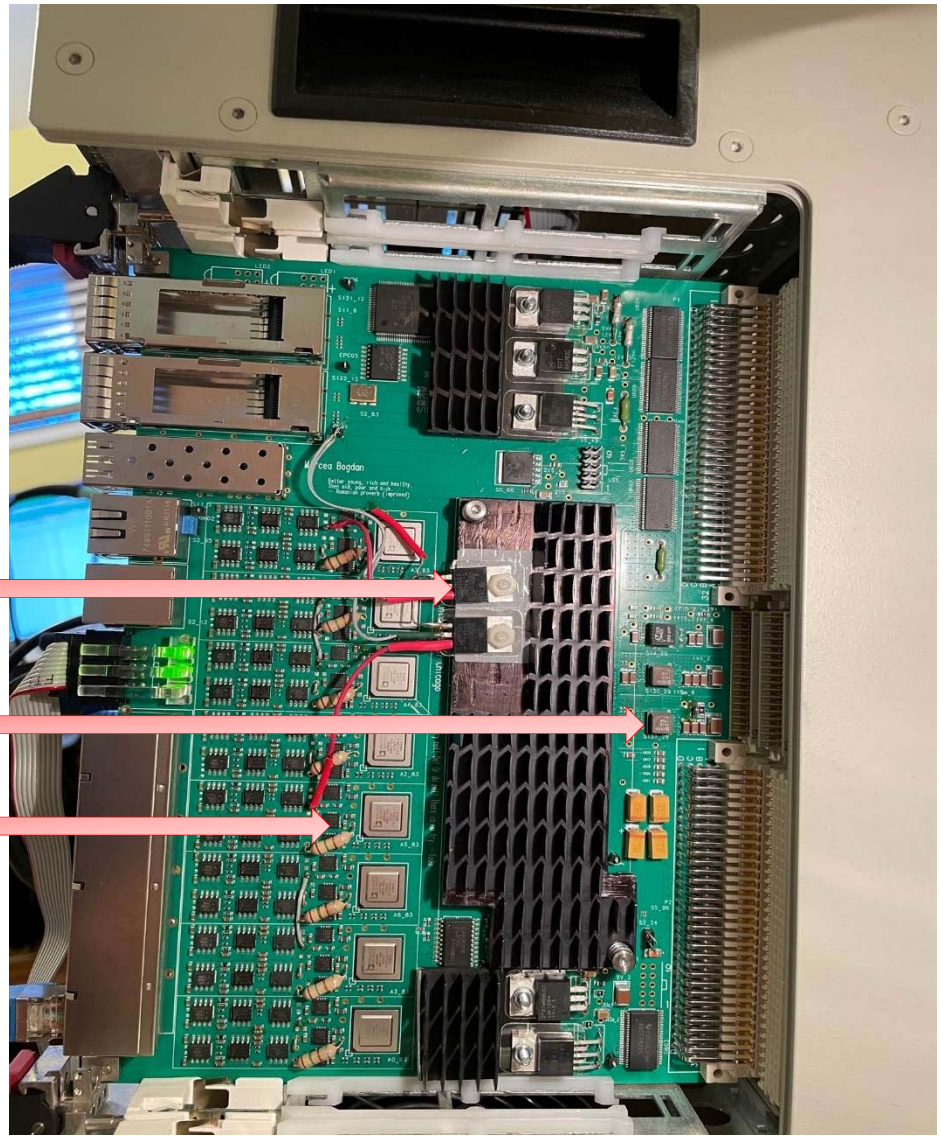

http://edg.uchicago.edu/~bogdan/14BIT_500MHz_ADC_Board/schematics.html

16-Channel,14-Bit, 500MHz ADC Board

ADI Calculator Problem

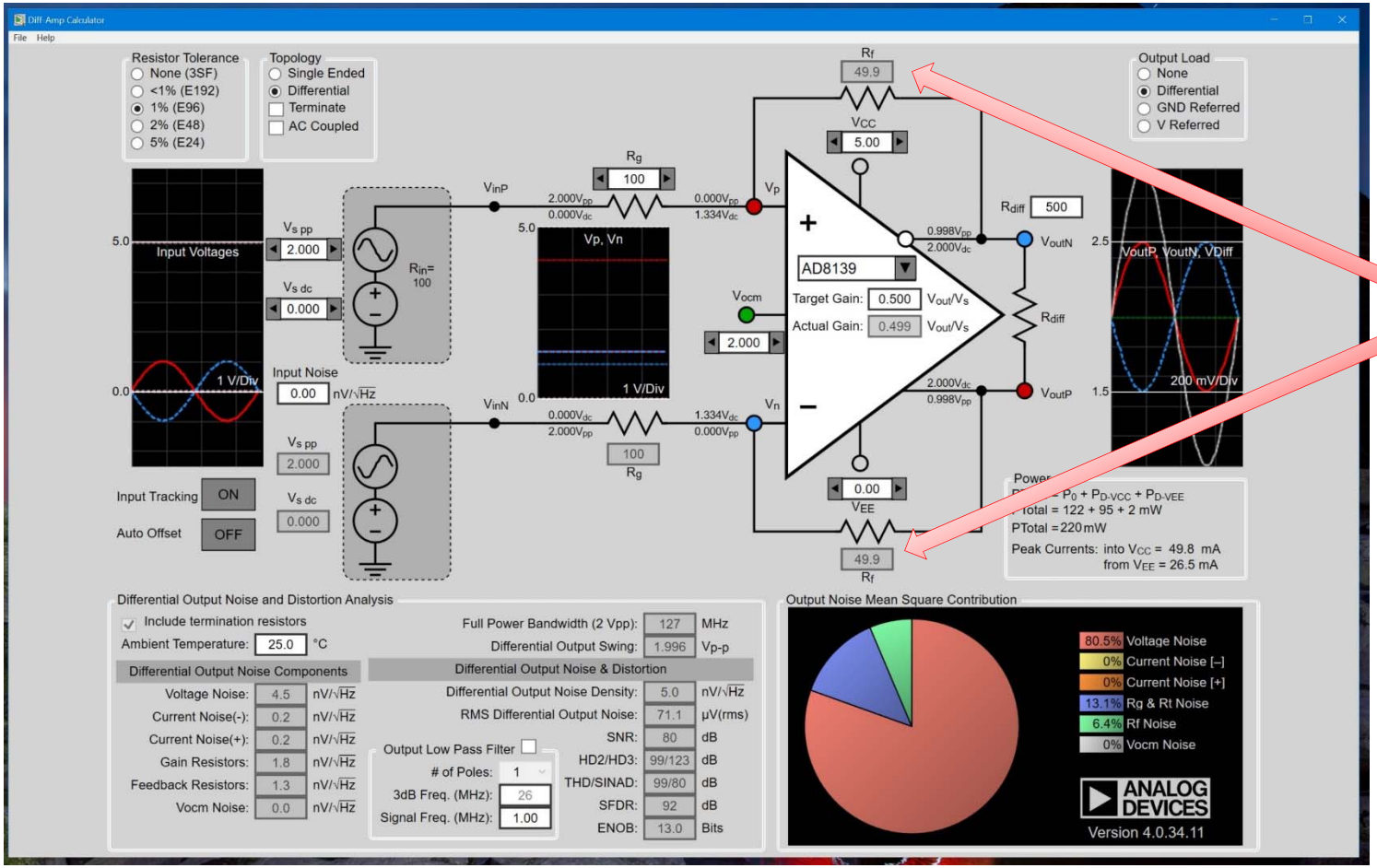

Should be > 200Ohm

Changed Rf, Rg

16-Channel,14-Bit, 500MHz ADC Board

VME recorded data – Good Noise even without LDOs for AVDD1for ADC chips

Noise will get even better on Rev.B, once DC/DC analog power is replaced with LDOs.

	A	B	C	D	E	F	G	H	I	J	K	L	M	N	O	P	Q
1	SPI Register 0x025 set to 0x0A																
2	0.440882	0.440882	0.453636	0.453636	0.453636	0.453636	0.440882	0.440882	0.440882	0.440882	0.453636	0.453636	0.453636	0.453636	0.453636	0.453636	AD8139 Gain = Rg/Rf
3	499	499	110	110	110	110	499	499	499	499	110	110	110	110	110	110	AD8139 - Rg [Ohm]
4	220	220	49.9	49.9	49.9	49.9	220	220	220	220	49.9	49.9	49.9	49.9	49.9	49.9	AD8139 - Rf [Ohm]
5	3.657912	3.581391	3.454682	3.178931	3.389313	3.381398	3.097702	3.464105	4.374529	3.968038	3.614069	3.893084	3.355908	3.349787	3.030413	3.848275	
6	819	806	568	573	665	677	813	795	775	862	620	765	697	647	635	717	
7	813	800	574	572	663	684	810	794	774	853	622	760	691	649	639	714	
8	811	800	563	574	665	682	806	797	759	853	614	756	698	657	636	719	

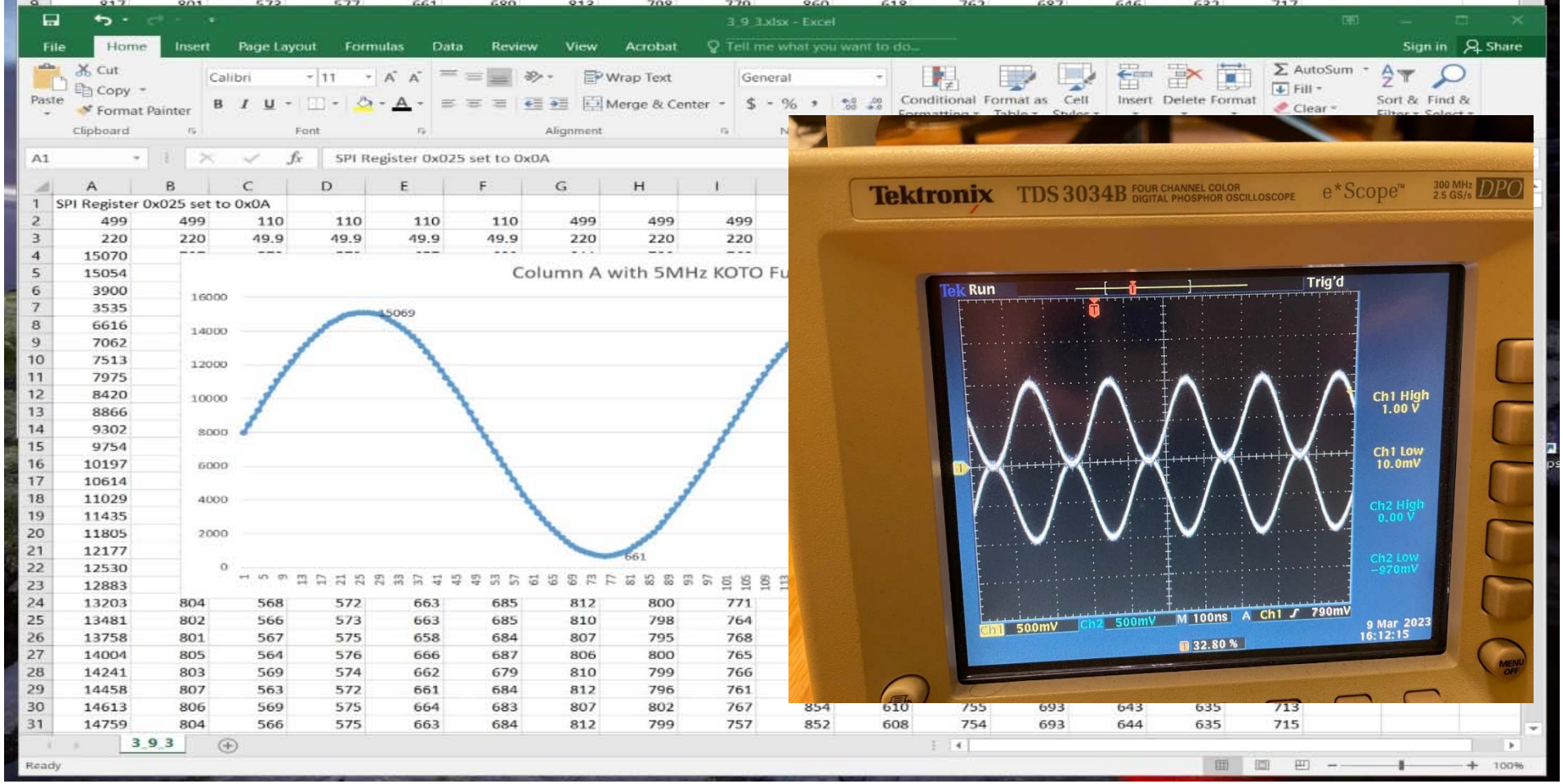

16-Channel,14-Bit, 500MHz ADC Board

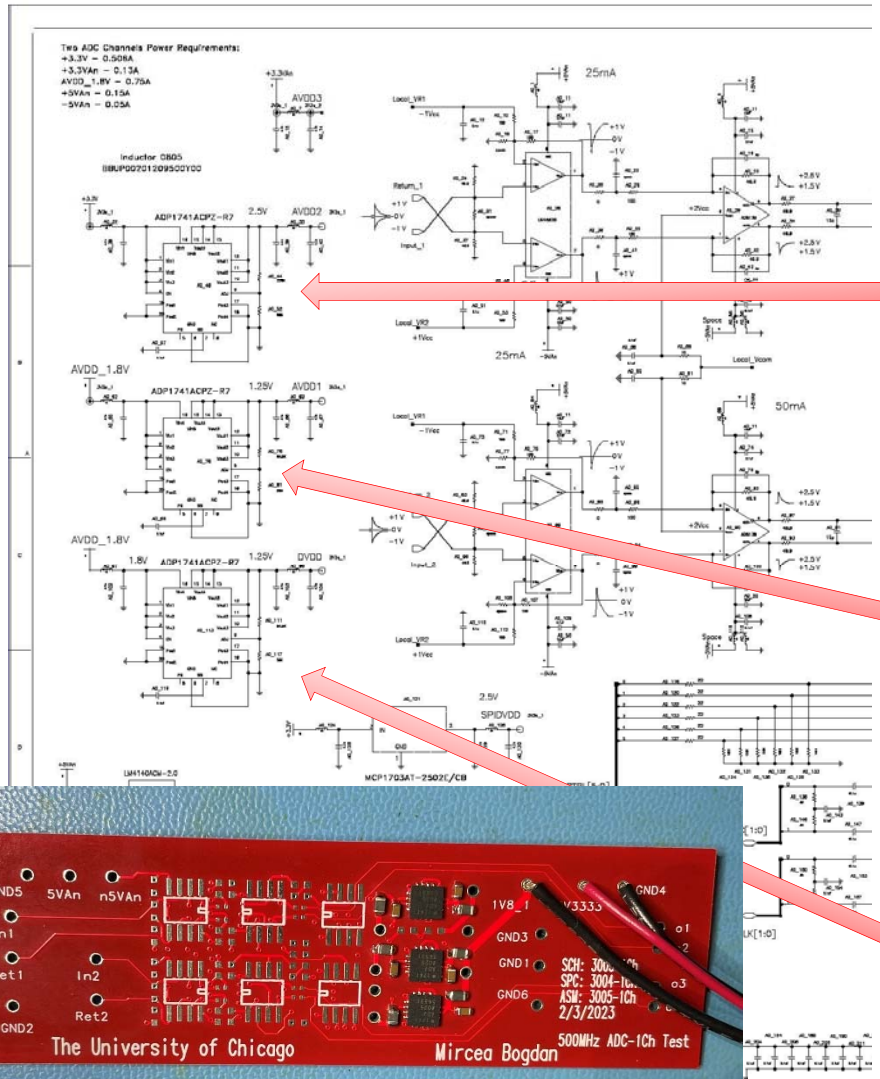

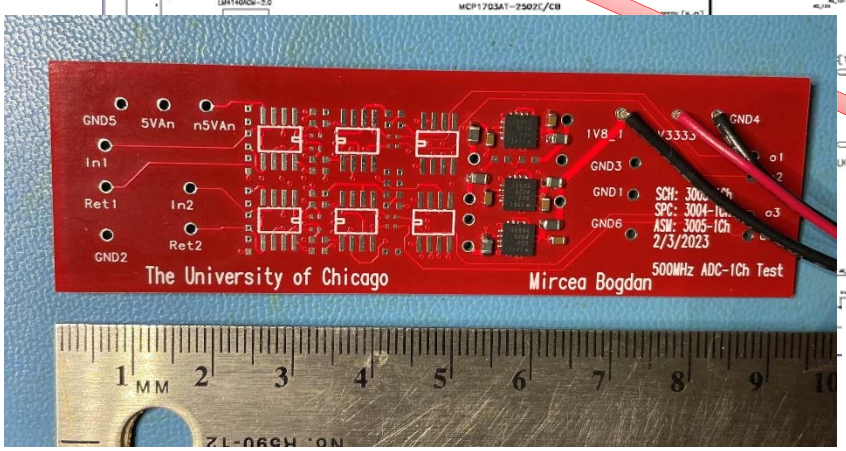

Schematic Problem

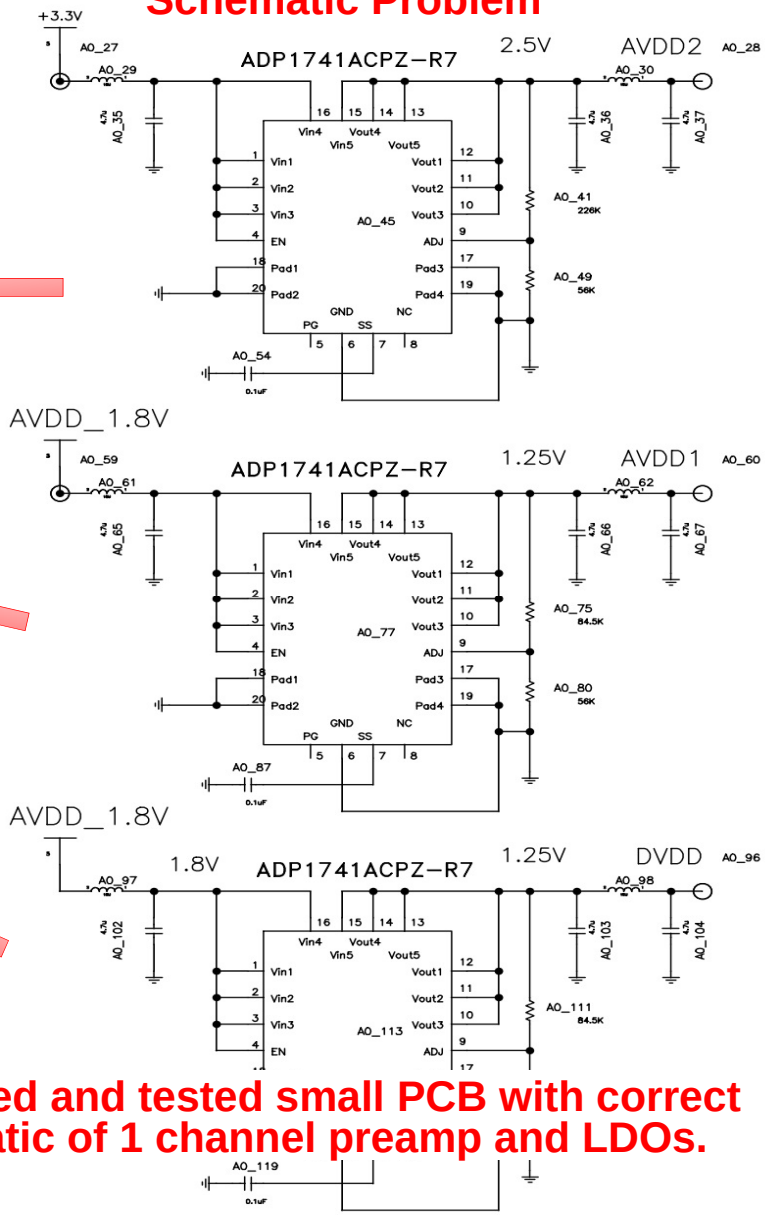

Designed and tested small PCB with correct schematic of 1 channel preamp and LDOs.

16-Channel,14-Bit, 500MHz ADC Board

- **Tested SFP, QSFPs – basic test OK.**

- **Tested loading .pof on Board 1 (with 2 ADC chips).**

- **Measured Power Supply Currents:**
  - **+3.3V – 5A (3A with ADCs in PDWN)**
  - **+5V – 3A (1.1A with ADCs in PDWN)**
  - **+7V – 1.13A**
  - **-- 07V – 0.84A**

Total power 45W (29.5W with ADCs in PDWN).

To do: test X-talk for new RJ45 connections