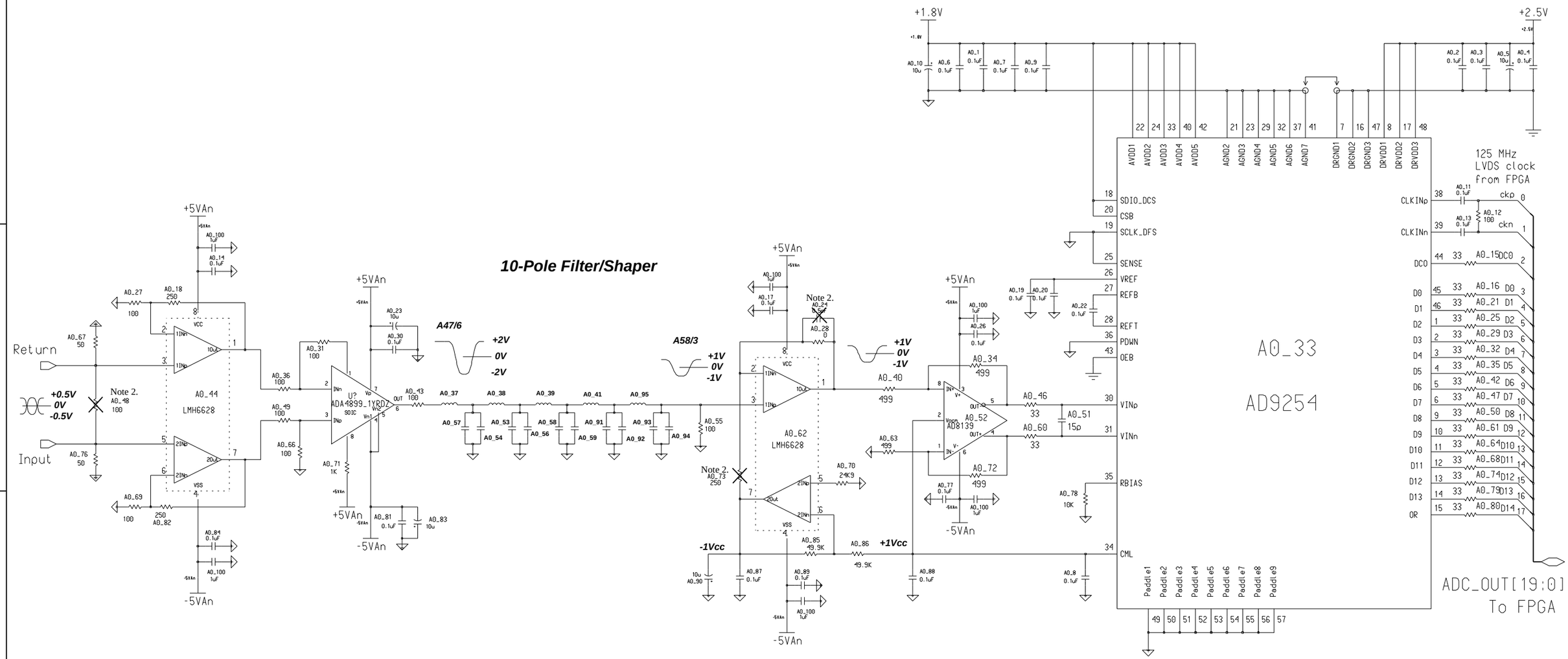

Notes:

1. The circuit is designed to function in both differential input and single ended with offset configurations.
2. The respective component will not be installed for the differential input configuration.
3. The signals drawn along the schematic are low frequency, not PMT pulses.
4. The gain is controlled by resistors: A0_18, A0_82:
   - As shown, the circuit provides full scale digital readout for a differential, low frequency, input signal of about 1.15Vpp.
   - Changing to: A0_18, A0_82 = 100 Ohm, the circuit would provide full scale digital readout for a differential, low frequency, input signal of 2Vpp.
5. PMT signals are shaped into wider, and with lower amplitude, pulses.
   - As shown, the circuit provides full scale digital readout for a differential, 25ns, input signal of about 2.2Vpp.

Engineer	M.Bogdan
Drawn by	M.Bogdan
R&D CHK	
DATE:	10/01/08
TIME:	11:00 am
QA CHK	

TITLE

ADC Channel j

16 Identical Channels on Board

Size C

REV B | DRW. B-2606 | Sheet 6_j of 12