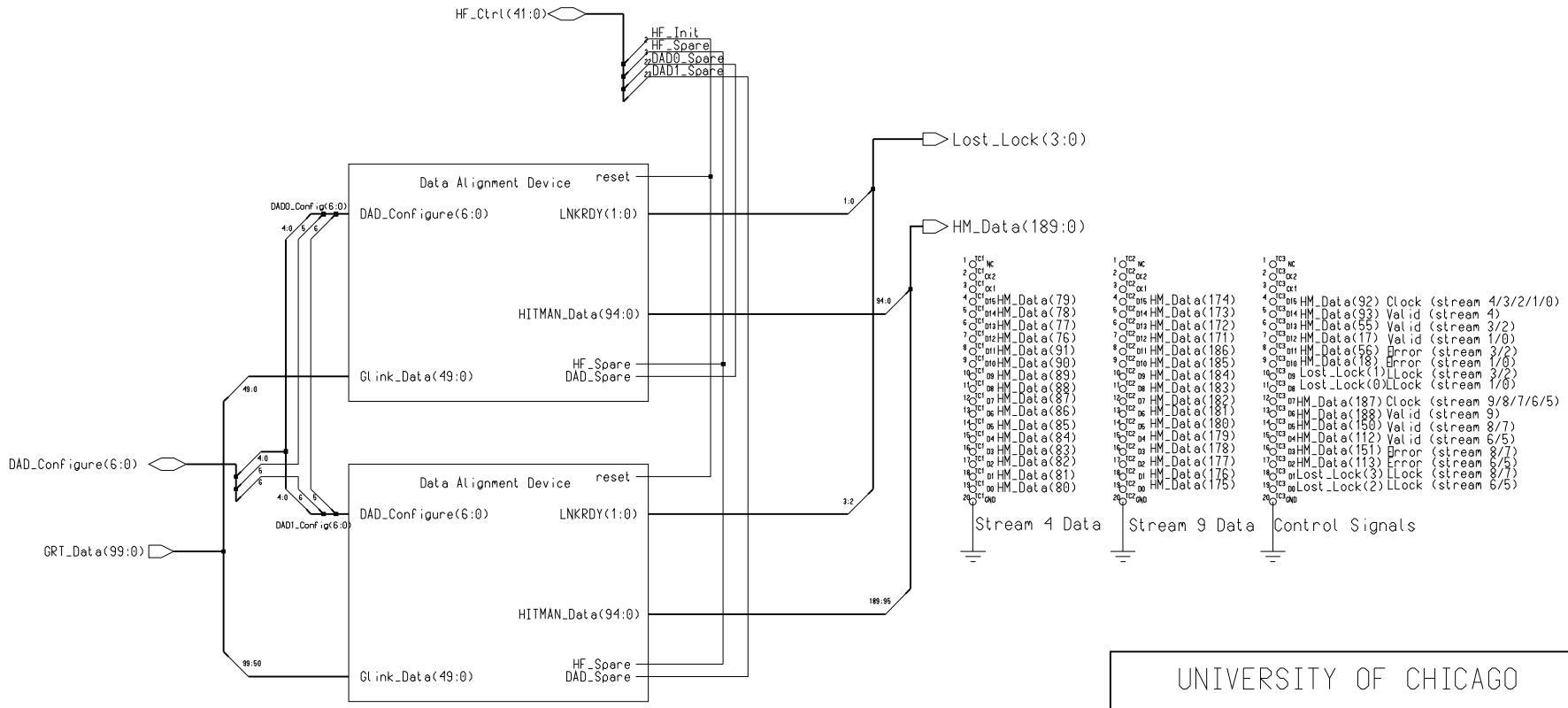

UNIVERSITY OF CHICAGO

ELECTRONICS DEVELOPMENT GROUP

CDF SVT Hit Finder

Data Alignment

SHEET	10 OF 20	C-2421
DATE	1998-12-17	REV A
DRWN	JWB/WJA/MAB	