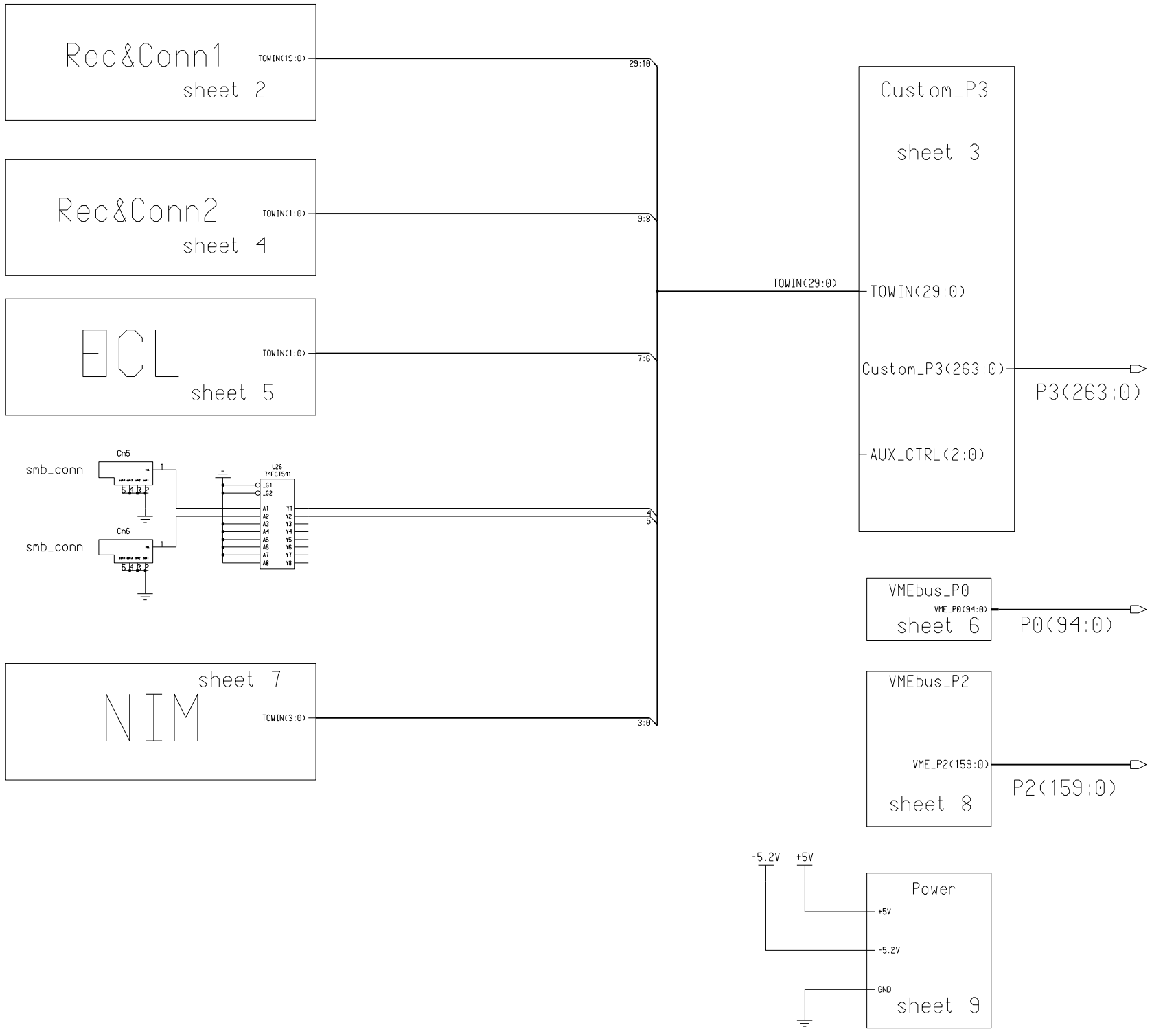

UNIVERSITY OF CHICAGO
ELECTRONICS DEVELOPMENT GROUP

TITLE
CDF Level1 PreFRED-AUX

DATE	REVISION DESCRIPTION
6/19/95	Change pinout of J0-11
6/9/97	Removed frames, added summing
7/24/98	modified summing

SHEET 1 OF 9
DATE July, 2000
DRWN MB/CP-W

B-2469
REV A