CDF/DOC/TRIGGER/PUBLIC/4849
July 4, 1999
Version 1.1

The SVT Hit Finder Board

Bill Ashmanskas, Jeff Berryhill, Mircea Bogdan, Ray Culbertson,
Henry Frisch, Harold Sanders, Mel Shochet
University of Chicago

1 Introduction

The SVT [1] Hit Finder board pre-processes a copy of the SVX-II raw data, providing a list of cluster positions to be used in finding and fitting SVT tracks. Several earlier notes [2, 3, 4, 5, 6] have described the Hit Finder design. Here, we document details of the design as implemented in the prototypes built in February, 1999. Only minor changes are expected between the prototype and the final design.

2 Data Flow

2.1 Big Picture

SVX-II [7] is a silicon strip detector providing charged-particle position measurements at five radii between 2.5 cm and 10.6 cm from the Tevatron beam line. Each of the five layers of silicon detectors is double-sided: one side (axial) measures $r \cdot \phi(r)$, while the other side (stereo) measures $z(r)$ in layers 0,1,3 and $r \cdot \phi(r) \pm z(r) \tan(1.2^\circ)$ in layers 2,4. (The baseline Hit Finder design ignores the stereo data.) SVX-II is divided into six readout barrels in z and into twelve wedges in ϕ (Figure 1).

The detectors measure pulse height (ionization deposited) vs. strip number, with an axial strip pitch of $(60, 62, 60, 60, 65)$ μm respectively for layer $(0, 1, 2, 3, 4)$. A charged particle typically deposits ionization in two or three adjacent strips in each layer. Signals from 128 adjacent axial strips are digitized by one SVX3 [8] chip. The SVX readout is sparse, but if a given strip is above readout threshold, the neighboring strip on each side will also be read out.

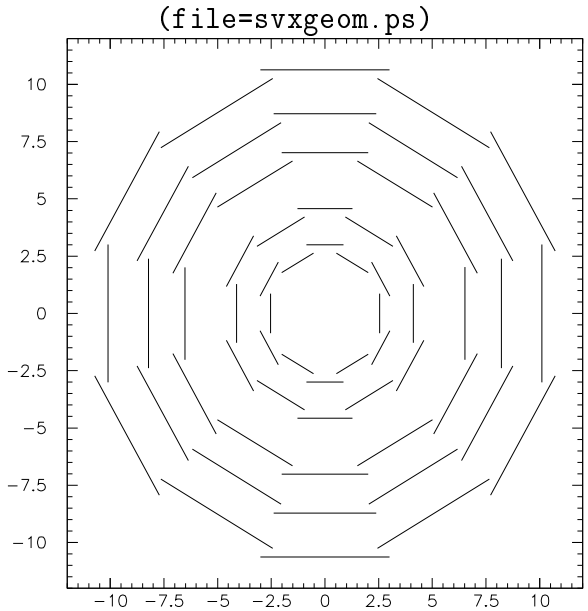

Figure 1: SVX-II geometry in x-y plane (dimensions in cm).

One SVX readout stream comprises the data for one layer of one wedge of one barrel. There are $5 \times 12 \times 6 = 360$ total streams. The number of axial chips per stream is $(2, 3, 5, 6, 7)$ respectively for layer $(0, 1, 2, 3, 4)$. The five streams from one wedge of one barrel are transmitted together on a pair of ~ 1 Gb/sec (G-link) fiber-optic serial links. The G-link signals are optically split in the counting room, so that the VME Readout Buffer [9] boards and the Hit Finder boards see identical copies of the SVX data.

Each Hit Finder processes data from two pairs of G-links (ten streams). (Three Hit Finders cover one complete ϕ sector of SVX-II.) An auxilliary card (VTM [10]) converts four G-links' serial data into four sets of 20-bit words, clocked out at 53 MHz. Each G-link's 20 data bits, accompanied by a clock signal and "data valid," "frame error," and "lost lock" control signals, are passed from the VTM to the Hit Finder via the VME J3 backplane.

The first stage of the Hit Finder (alignment) needs to separate four sets of 20-bit words corresponding to four G-links, each with its own clock, into ten sets of 8-bit words corresponding to ten SVX readout streams. The main complication is that each fiber carries 2.5 streams, so the data from each pair of fibers must be aligned into five complete streams. A second task performed by the alignment stage is to parallelize each stream from a 53 MHz sequence of 8-bit words into a 26.5 MHz sequence of 16-bit words. This conversion simplifies board design significantly, by halving the signal frequency, and simplifies data processing, since an SVX data stream (Table 1)

logically consists of byte pairs (e.g. strip number + pulse height).

The next stage of the Hit Finder (clustering) parses each data stream, recognizing event header words, chip ID words, and ordinary data words. The first main task of the clustering engine is to simplify the data format, by eliminating chip ID words and (in exchange) widening the strip number from seven bits to ten bits. The second task is to replace the sequence of (strip number + pulse height) entries with a sequence of cluster positions, obtained by computing the pulse-height-weighted average of consecutive strip positions. (Recall that a charged particle typically leaves a signal in several adjacent strips.) This average is quantized in sixteenths of the strip pitch (about 4 μm), making a cluster position fourteen bits wide. The clustering engine for each stream writes 14-bit clusters (plus a bit to flag a "long" cluster, a bit to flag an end-of-event word, and two spare bits) to a FIFO. An opportunity to write a word to the FIFO occurs once per 26.5 MHz clock cycle, but because of the clustering, actual write operations are sparse. At the end of each event, each clustering engine writes a word containing error flags and the bunch-crossing number.

Next, the merging stage, clocked by an on-board 30 MHz oscillator, combines all ten streams' data into a single data path, prepending a stream number to each cluster position. A final output stage maps stream numbers into barrel and layer bits and monitors error conditions (such as the merging of data from two different Tevatron bunch crossings). Errors are reported by setting bits in an end-of-event word and optionally by asserting error signals on the VME J2 backplane. The output processor sends 23-bit words (Table 2), clocked out with a "data strobe" signal, to a front-panel connector via a set of LVDS drivers. The downstream board (a Merger [11] board) returns a "hold" signal to indicate a nearly full input FIFO. A second front-panel connector, reserved for expansion, shares the 23 data lines with the first connector but has its own "data strobe" and "hold" lines.

Figure 2 sketches the Hit Finder data flow. Figure 3 shows the top-level Hit Finder schematic. Figure 4 shows the physical board layout. The HF_Ctrl(41:0) bus, which goes between the Boot chip and nearly everything else on the board, is described in Tables 3 and 4. We refer to the data path before the FIFOs as the "front end" of the Hit Finder and the data path after the FIFOs as the "back end."

2.2 P3

The Hit Finder receives SVX-II raw data from a VTM auxilliary card at 53 MHz, via the VME J3 backplane. The P3 connectors used on the Hit Finder are 110-pin ERNI 64785 (P5) and 125-pin ERNI 64179 (P6). Tables 5 and 6 show the P3 pin assignments connecting the VTM to the Hit Finder. The bus from P3 to Data Alignment on the schematic, GRT_Data(99:0), is described in Table 7. Because of the high speed, all traces from P3 to the DAD chips are less than four inches long.

2.3 Alignment Device

The Hit Finder contains two Data Alignment Device (DAD) chips, one for each pair of G-links. Each DAD is an Altera Flex 10K30AQC240-1 chip, with 46% of its logic cells in use. It aligns the data from two G-links and parallelizes five streams of 53 MHz 8-bit words into five streams of 26.5 MHz 16-bit words. The data to be aligned for each G-link begin with the first word for which DAV* (active low) is asserted. The DAD allows the two G-links to be out of phase by up to 2.5 clock cycles.[1]

Between events, neither DAV* is asserted, and the DAD waits for valid data. As valid data words arrive from the G-links, they are written into a pair of ten-word-deep circular buffers within the Altera chip. Once a few valid words have arrived, aligned data can be clocked out. Each G-link's DAV* is deasserted when that link's transmission for the current event is complete. When both DAV* signals are no longer asserted and all valid data have been clocked out, the DAD returns to the wait state. The DAD performs no error checking.

A Reset signal, needed to prepare the DAD for data taking, is driven by HF_Init (on the HF_Ctrl bus—Table 3), which is generated by the Boot chip in response to SVT_Init*.

DAV* and ERROR signals are supplied per G-link at 53 MHz. Corresponding signals must be sent out per clustering engine at 26.5 MHz. For the un-split streams from a G-link, a 26.5 MHz word's ERROR bit is the OR of the corresponding two 53 MHz words' error bits; for the split stream, a four-way OR is needed. Similarly, "valid" outputs are computed with a two-way or four-way AND.[2] Each DAD divides down its 53 MHz input clock, using a separate output pin for the 26.5 MHz clock sent to each clustering engine. The positive clock edge is centered between data transitions. Table 8 describes the HM_Data(189:0) bus, on which data travel from Data Alignment to Hit Processing.

LNKRDY* signals, sent from P3 on the GRT_Data bus, enter the Data Alignment box on the schematic and are passed on to the Hit_Merging box as Lost_Lock(3:0). Physically, these four lines are connected directly from P3 to the MOP chip. Since they are effectively slow-control signals, their length is not important.

The DAD has been successfully simulated at input speeds up to 61 MHz (15% above nominal). Our simulations have assumed that the positive STRBOUT clock edge is centered between data transitions. We have also tested the DAD with a GSTM [12] board running at 55 MHz (4% above nominal speed).

The DAD contains no VME-addressable registers.

[1] We expect the two G-links to be out of phase by less than one clock cycle. (Reference?)

[2] The DAD sends the HitMan an active-high "valid" signal constructed from its active-low DAV* signals, so the AND is really a NOR.

2.4 Clustering Engine

A clustering engine (also called a Hit Squad on the schematic) consists of a HitMan (Altera Flex 10K50VBC356-2 chip, 54% logic used), an Input SPY buffer (Motorola MCM69F618CTQ9 64K×18 synchronous SRAM), a Cluster RAM (Samsung KM681002AJ-12 128K×8 asynchronous SRAM), and a FIFO (Cypress CY7C4245-10ASC 4K×18 synchronous). Figure 5 shows one clustering engine, and Figure 6 shows the complete Hit Processing sheet of the schematic.

Each clustering engine transforms one stream's raw SVX data (Table 1) into a sequence of cluster positions (Table 9), which are written to the FIFO. The Input SPY buffer (ISPY) stores a copy of the last 64K input words seen by the clustering engine, for debugging and validation. The ISPY can also be used as a data source, for initially testing the Hit Finder without a VTM. In this test mode, bits 16 and 17 are the ERROR and "valid" inputs, and the special words 0x10000 and 0x1ffff mean "halt" and "repeat" respectively.

Internally, the HitMan chip is divided into three stages, called Ready, Aim, and Fire. Ready is a state machine that parses the SVX raw data. Initially, the Ready machine waits in its Ready state until it sees an input word whose Valid bit is set. This first valid word is discarded, and the machine goes to the Header state, which latches the bunch-crossing number into bits 0–7 of the end-of-event-word register, initializes a few registers, and moves to the RunData state. The RunData state keeps track of the number of axial chips seen (initialized to the illegal value 15[3]), the last 10-bit chip+strip number seen (initialized to 0), and the error bits in the end-of-event-word register. If the input word is an axial chip ID number (high byte is 100xxxxx[4]), its value is compared with the expected value, and the chip count is incremented (or set to 15 if the expected chip ID is not seen). If the input word is a stereo chip ID number (high byte is 101xxxxx), the machine goes to the EndData state. If the input word is an ordinary data word (high byte is 0xxxxxxx), an output word is computed from the 3-bit chip number, the 7-bit strip number, and the 8-bit pulse height. If the current chip+strip number is less than its predecessor, if the chip count is 15, or if the ERROR bit is set on the input word, then the output word is marked invalid, error bits are set in the end-of-event-word register, and the machine goes to the EndData state. The output Valid bit is only set when the machine is in the RunData state and is writing an ordinary data word in which no error is detected. The EndData state clocks out 21 words marked invalid (to flush the downstream pipeline), asserts an end-of-event flag for one clock cycle, and goes to the Wait state. The Wait state

[3] The illegal value used to be 7, but we made it 15 to make the Hit Finder compatible with the ISL, which has eight axial chips per stream.

[4] In May, 1999, we reversed the axial/stereo chip ID convention to be compatible with the offline reconstruction software.

waits until it sees an input word whose Valid bit is clear, then goes to the Ready state. There is also a Disabled state which is entered and exited only via VME write. Ready sends Aim a sequence of words that consist of a valid bit, a 3-bit chip number, a 7-bit strip number, and an 8-bit pulse height. Ready also outputs a 15-bit end-of-event word and an end-of-event flag used to multiplex data words and event-of-event words.

Aim is a five-stage pipeline used to subtract a pedestal value from each pulse height and to reject words whose pulse heights are below a threshold. Aim first replaces all negative pulse heights with zero.[5] It then looks up a 7-bit chip+strip-dependent pedestal and a 7-bit chip-dependent threshold in the Altera chip's internal SRAM. Aim subtracts the pedestal, zeroing negative results, and marks the word invalid if its pedestal-subtracted pulse height is below threshold.

Fire is a fourteen-stage pipeline used to recognize and cluster contiguous sequences of strip numbers and compute the charge-weighted average of strip positions in each cluster. Unlike Ready and Aim, which run continuously, the Ready pipeline uses a clock-enable that allows data to advance only if Aim outputs a valid word or Ready is in the EndData state. This selective clocking prevents chip ID words from splitting clusters that span chip boundaries, and allows HitMan's power consumption to benefit (somewhat) from the pulse-height cut. Two different clustering algorithms ("peaks" and "mixed") have been designed for the Hit Finder; currently only "mixed" is implemented. We describe what is implemented.

Fire latches in its input, increments a copy of the current chip+strip number, and evaluates whether whether the next strip is adjacent to the current strip. It then accumulates a running count of adjacent strips and a running sum of the pulse heights on adjacent strips. If the summed charge is above a programmable threshold, a good-cluster-charge bit is set. If the cluster length exceeds three strips, a long-cluster bit is set. An end-of-cluster bit flags the last strip in a cluster—if the next strip is non-adjacent or if the cluster length is a multiple of six strips. (Extremely long clusters are divided into six-strip clusters.) Bits 6–2 of the pulse height for three consecutive pipeline stages form a 15-bit CRAM address; one or two of the three 5-bit subaddresses may be forced to zero, depending on which adjacent pipeline stages actually contain adjacent chip+strip numbers. The CRAM is used as a lookup table for computing the charge-weighted average of one (trivial), two, or three adjacent strip positions; bits 0–5 of the CRAM data bus are used as a signed offset to the central strip position, quantized in sixteenths of the strip pitch. For a long cluster (4–6 strips), no charge-weighting is done; instead, the cluster length is right-shifted one bit and subtracted from the final strip position to compute the median. To write out clusters, one simply sets the Valid output bit only for the last strip in each cluster.

[5] The pulse height is an 8-bit signed quantity; negative values have bit 7 set.

For three-strip clusters, a special case is needed to overwrite the last strip's centroid with the middle strip's centroid, since the CRAM gives the desired average when the middle strip is the middle CRAM subaddress. Fire outputs a Valid bit and a 14-bit cluster centroid (10-bit chip+strip; 4-bit substrip).

By only asserting the FIFO's WEN* for valid Fire outputs, the HitMan writes clustered SVX data to its FIFO. WEN* is also asserted when Ready indicates that the end-of-event word should be written. A multiplexer switches the FIFO data lines between Fire's output and Ready's end-of-event word.

Each HitMan counts the number of clusters written for the current event. If the count exceeds a programmable limit, WEN* is suppressed for further clusters and an error signal is sent to Ready, causing it to flag a "truncated data" condition in the end-of-event word. This throttle has been implemented to prevent occasional high-occupancy events from clogging the SVT pipeline; instead, an error flag can inform Level 2 of an event that is too large to handle quickly. If the limit is set to zero (the default), then no limit is enforced.

The clustering engine has been successfully simulated at speeds up to about 35 MHz (30% above nominal), but the maximum speed has not been re-checked since a few changes (e.g. final choice of ISPY and CRAM components; addition of number-of-clusters cut; small fixes in Ready stage) have been made. The latency from HitMan input to HitMan output is about 0.95 nsec.

The HitMan allows VME read/write access to its ISPY and CRAM memories, its internal memories, and several internal registers (listed in Table 16). It also allows VME data to be written into the FIFOs, e.g. for testing the Merger. Each HitMan is given an identity through four "stream ID" bits that are tied to VCC and ground to form the bit pattern for a stream number 0–9. This identity is needed so that each HitMan responds to the correct portion of VME address space.

2.5 Merger

The Merger, an Altera Max 7512AEQC208-7 chip (36% logic used), reads data from all ten FIFOs and writes them to a single data path. It is clocked by a 30 MHz oscillator, sent via the Boot chip. The Merger knows for which streams it has already seen an end-of-event word; among the remaining streams, it chooses one whose empty* flag is not asserted. Once all ten end-of-event flags have been set, all are cleared, and any non-empty FIFO can be read out. The FIFOs are grouped as two sets of five; each set shares a data path to the Merger. On even clock cycles, the Merger considers streams 0–4; on odd clock cycles, streams 5–9. A test mode can be enabled that forces the Merger to read all of stream 0 (until end-of-event is seen), then all of stream 1, and so on, up to stream 9. In this mode, the Merger necessarily outputs data at 15 MHz.

The Merger sees each FIFO's empty* flag, and sends read-clock and read-enable* signals to each FIFO individually. The FIFOs are clocked continuously (but not necessarily read-enabled), because the empty* flags are updated on positive read-clock edges. The FIFO read-enable* and output-enable* lines are tied together.

A stream label is prepended to each 18-bit data word (Table 9) read from each FIFO. The stream number logically would fit into four bits, but to simplify the Merger's internal logic, six bits are used: a one-hot-bit encoding for stream modulo five (with no bit set when no data are present) and a sixth bit to distinguish streams 0–4 from streams 5–9.

Note that streams (1,3) have been exchanged with streams (6,8) in their connections from Hit Clustering to Hit Merging. This exchange is expected to reduce occupancy correlations among streams sharing a common data path to the Merger (e.g. a jet that causes high occupancy in every layer of a given barrel). Streams are numbered so that they make sense from the Merger's perspective, not from P3's perspective.

Figure 7 shows the Hit Merging sheet of the schematic. Table 11 describes the HM_Afifoio(37:0) and HM_Bfifoio(37:0) buses that connect the FIFOs to the Merger. Table 10 summarizes the Merged_Data(25:0) bus that connects the Merger to the MOP.

The Merger provides VME read/write access to several internal registers (listed in Table 16) and read access to the FIFOs and their empty* flags.

The Altera compiler reports that the Merger can be run at 38 MHz (26% above nominal). We have successfully simulated the Merger at roughly 50% above nominal speed, but we have not re-checked this maximum speed since we migrated from a 7256 to the larger 7512 device.

2.6 Output Processor

The Merger Output Processor (MOP) is an Altera Flex 10K50VBC356-2 chip (62% logic used). It accepts ten merged streams' cluster data from the Merger. An internal memory lookup translates stream numbers into layer and barrel numbers. Table 2 describes the MOP output. The MOP looks for each stream's end-of-event word, accumulates errors reported by the clustering engines ("invalid data," "truncated data"), and checks that all bunch-crossing IDs match ("lost sync"). The MOP also monitors the G-links' four LNKRDY* signals ("lost lock") and the FIFOs' ten full* signals ("FIFO overflow"). The MOP suppresses the HitMan end-of-event words as they pass through. Once it has seen the end of all streams, it writes its own end-of-event word, which contains error flags, the bunch ID, and an event parity bit.

The MOP communicates with the Front Panel via bus MOPped_Hits(28:0). The Front Panel has two I/O connectors (one reserved for future expansion). There

are 23 data lines, common to both connectors. Each connector receives its own Data Strobe signal (so that the MOP can be programmed to send certain words to only one FP connector). Each FP connector sends the MOP its own Hold signal (for flow control); the MOP sends the logical OR of the two Hold signals to the Merger.[6] Finally, to illuminate LEDs, the MOP sends two active-low signals to the Front Panel, one per FP connector, which are asserted for the duration of any clock cycle in which the MOP writes valid data. The Data Strobes could not be used for this purpose because the Front Panel's 74HCT123 monostables require a minimum input pulse width of 25 nsec. Table 12 describes the MOPped_Hits bus.

The SVT Data Strobe signal is a strobe, not a free-running clock: It runs only when there is a valid word to send. Because gate delays can be difficult to predict within an Altera chip, the MOP does not gate the clock internally. Instead, it sends out a clock and a Valid signal. The Valid signal is generated by an inverted clock so that it is one-half clock cycle ahead of the corresponding data word; it is then delayed 10 nsec so that it switches about 6 nsec before the positive clock edge. The NAND of the delayed Valid signal and the clock is computed by a fast 74AS00 gate ($1 < \Delta t < 5$ nsec) and used as the Data Strobe. Since this is a bit confusing, it is illustrated in Figure 8.

Discussion of error registers goes here.

The MOP requires an Output SPY buffer (OSPY) that is at least 23 bits wide, which we implement with two Motorola MCM69F618CTQ9 64K×18 synchronous SRAMs. While 36 data bits are 50% more than we need, using the same component for ISPY and OSPY reduces the number of distinct components we must stock. The OSPY stores a copy of the last 64K output words written by the MOP, for debugging and validation. The OSPY can also be used as a source of data to be sent directly to the Front Panel. This test mode would be useful mainly to check front-panel connections or to provide test data to another SVT board. We have not yet checked this test mode in the simulation.

The MOP provides VME read/write access to several internal registers (listed in Table 17), to its internal barrel/layer memory, and to 64K×32 bits of OSPY memory.

The MOP has been successfully simulated at speeds well above 30 MHz. However, only fairly simple error conditions, such as "invalid data" reported by the Hit-Man, have been simulated. We still need to verify that the MOP correctly reports and recovers from serious errors such as G-link lost lock.

[6] A VME-programmable Hold override may be a useful addition to the MOP.

2.7 Front Panel

The Front Panel includes two 52-pin KEL 8822E-052-171H standard SVT protocol connectors, twelve National DS90C031TM quad LVDS drivers (six per connector), and two National DS90C032TM quad LVDS receivers (one per connector). The connector pin assignments are shown in Table 13. The traces from the LVDS drivers to the front-panel connectors have been routed as differential pairs and kept below two inches in length.

The Front Panel contains three connectors for Altera bit-blaster configuration and one Altera EPC1 configuration PROM. One connector goes to the Merger (bus Merger_Config(3:0)), for JTAG-based configuration. A second connector is multiplexed with the EPC1 (as in Crate Sum [13]), to configure the Boot chip (bus Boot_Config(4:0)). The third connector goes to ordinary I/O pins on the Boot chip (bus Bkup_Config(4:0)); the Boot chip multiplexes these pins with its own chip-configuration logic, so that we have the option to use a bit blaster as a work-around if the Boot chip fails to configure other Flex 10K chips correctly.

The Hit Finder expresses its internal state through twelve front-panel LEDs, described in Table 14.

Figure 9 shows the complete Front Panel sheet of the schematic. Figure 10 shows the connections from the MOPped_Hits bus to LVDS drivers/receivers and the front-panel connectors.

3 VME I/O and Configuration

The Boot chip, an Altera Flex 10K50VBC356-2 chip (19% logic used), plays a central role in Hit Finder VME I/O and in configuring on-board memories and programmable logic. It uses an Intel StrataFlash DA28F320J5-100 2M×16 FRAM as its data source for configuration and a 10-tap, 40 nsec/tap delay line to generate timing signals.

A minor role performed by the Boot chip is clock fan-out. The on-board 30 MHz oscillator feeds the Boot chip, which divides it down internally to 15, 7.5, 3.75, and 1.875 MHz. A copy of the 30 MHz clock is sent to the Merger. The Boot chip configures FPGAs and memories at 1.875 MHz. A test clock signal, used when SPY buffers are read out as a source of test data, can be programmed to 30 MHz, 15 MHz, 7.5 MHz, or strobed by VME writes to a special address. To preserve signal integrity, the Boot chip sends a clock out to each destination on its own separate pin.

3.1 VME Data Path

The Hit Finder VME interface is the same as that found in Level 1 Chicago boards, such as Crate Sum [13], with two major exceptions. First, what used to be the

VME Interface chip has been copied verbatim to become a subdesign inside the Boot chip. Second, all P1 and P2 signals (except for open-collector outputs) are now buffered by ABTE 16245 bus transceivers. To accomodate the first change, buses VME_ETC(23:0), VME_Data(31:0), and VME_Addr(31:2) now pass between the VME Interface and Boot/Configure blocks of the schematic. VME_Addr and VME_Data are just the buffered P1/P2 address and data buses. VME_ETC, described in Table 15, carries everything else that the old VME chip-turned-subroutine needs to exchange with the VME Interface block of the schematic.

The Boot chip is an interface between the VME backplane's address/data buses and the rest of the Hit Finder board. What the rest of the board sees are three internal buses: HF_VME_Addr(24:0), HF_VME_Data(31:0), and HF_VME_Ctrl(3:0). All 25 address lines go to each HitMan and the MOP; the Merger sees only lines 14–24. Bits 20–24 are used as a device number: 0=Boot, 1=HitMan, 2=ISPY, 3=CRAM, 4=FIFO, 5=MOP, 6=OSPY, 7=Merger, 10+11=FRAM. Bits 16–19 are used as a stream number (0–9; 15 for broadcast write) where appropriate. Bits 0–15 are a device-dependent subaddress. Tables 16 and 17 describe the assignment of Hit Finder address space. All 32 data lines go to the MOP; the Merger and HitMan chips use data lines 0–17. Table 18 describes the HF_VME_Ctrl bus, and Figure 11 illustrates the timing of the internal address and data strobe signals. Because these lines run all over the board, great care has been taken in their routing and termination. We expect to have no problems at the modest (2–4 MHz) speed of Hit Finder VME I/O. (Discuss? Show a sample trace?)

3.2 Configuring FPGAs and Memories from FRAM

3.3 P2 Slow-Control Signals

4 Power

Table 22 shows Hit Finder power pin connections. Table 23 shows the current drawn from each power supply, as measured in the prototype.

5 Prototype Test Sequence

6 Logic Analyzer Connectors

7 Various and Sundry

Figure 12 is a parts list spreadsheet. We need to check this against the CAD system's component catalog and see if we missed any small parts.

References

[1] S. Belforte *et al*, "Silicon Vertex Tracker Technical Design Report," CDF Note 3108 (April, 1995).

[2] J. Berryhill *et al*, "Interfaces to the SVT Hit Finder Board," (April, 1997). (See `http://hep.uchicago.edu/cdf/general_upg/svt/hitfinder.html` for text.)

[3] J. Berryhill *et al*, "Conceptual Design of the SVT Hit Finder Board," (April, 1997). (See above URL.)

[4] J. Berryhill *et al*, "Preliminary Component Specification of the SVT Hit Finder Board," (July, 1997). (See above URL.)

[5] R. Culbertson, "A Clustering Engine for the SVT Hit Finder Board," (September, 1996). (See above URL.)

[6] J. Berryhill *et al*, "Error Handling of the SVT Hit Finder Board," (February, 1998). (See above URL.)

[7] R. Blair *et al* (CDF II Collaboration), "The CDF II Detector Technical Design Report," FERMILAB-Pub-96/390-E (November, 1996).

[8] SVX3 reference goes here.

[9] VRB reference goes here.

[10] VRB Transition Module documentation can be found at `http://www-ese.fnal.gov/SVX/Production/SVX_Web/VTM/VTM.html`

[11] Merger board reference goes here.

[12] GSTM board reference goes here.

[13] Crate Sum reference goes here.

[14] CDF 4578 (SVT inter-board protocol) reference goes here.

Byte $2n$	**Byte** $2n+1$
HDI ID *	HDI ID *
bunch crossing #	back-end state *
axial chip ID	status *
strip #	pulse height
strip #	pulse height
...	...
axial chip ID	status *
strip #	pulse height
strip #	pulse height
...	...
stereo chip ID	status *
strip # *	pulse height *
strip # *	pulse height *
... *	... *
stereo chip ID *	status *
strip # *	pulse height *
strip # *	pulse height *
... *	... *
EOR *	EOR *
... *	... *
EOR *	EOR *

Table 1: SVX-II raw data format. Bytes ignored by the Hit Finder are marked with an asterisk. Event header words can not be distinguished by their contents, so "data valid" transition must be observed. Axial chip IDs are 101xxxxx. Stereo chip IDs are 100xxxxx. Strip numbers are 0xxxxxxx. EOR bytes are 11xxxxxx. Pulse heights are 8-bit signed quantities; negative values have bit 7 set. All chip IDs occur, in order, even when a chip has no strips above readout threshold.

<table>
<tr><td>24</td><td>23</td><td>22</td><td>21</td><td>20</td><td>19</td><td>18</td><td>17</td><td>16</td><td>15</td><td>14</td><td>13</td><td>12</td><td>11</td><td>10</td><td>09</td><td>08</td><td>07</td><td>06</td><td>05</td><td>04</td><td>03</td><td>02</td><td>01</td><td>00</td></tr>
<tr><td>AF</td><td>DS</td><td>EE</td><td>EP</td><td colspan="3">layer (1–5)</td><td colspan="3">barrel (1–6)</td><td>LC</td><td colspan="3">chip (0–6)</td><td colspan="7">strip (0–127)</td><td colspan="4">substrip (0–15)</td></tr>
<tr><td>AF</td><td>DS</td><td>EE</td><td>EP</td><td colspan="12">errors: 16…9=spare, lostlock, trunc, intovf, invdata, fifoovf, lostsync, parity</td><td>PA</td><td colspan="10">bunch crossing # (8 bits)</td></tr>
</table>

Table 2: Hit Finder output data format for a normal word (above) and an end-of-event word (below). AF is "almost full," which we also call "hold." EE is "end of event" flag. EP is "end packet," which we always assert because HF outputs only single-word packets. PA is a parity bit for downstream error detection. DS is the active-low strobe signal described in Figure 8.

Bit	Name	To/ From	Chip	Function
0	HF_Load	T	HM/Mgr/MOP	Wait for VME I/O
1	HF_Freeze	T	HM/Mgr/MOP	Enable limited VME I/O
2	HF_Init	T	All	Reset before data taking
3	HF_Spare	T	All	TBD
4	HF_Test0	T	HM	Input from ISPY
5	HF_Test1	T	MOP	Output from OSPY
6	HF_Test2	T	Merger	Deterministic merge
7	HF_CDFerror	F	MOP	Assert P2 CDF_ERROR*
8	HF_SVTerror	F	MOP	Assert P2 SVT_ERROR*
9	HF_LostLock	F	MOP	Assert P2 SVT_LLOCK*
10	HM0_TestClock	T	HM0	Clock for ISPY-read mode
11	HM1_TestClock	T	HM6	Clock for ISPY-read mode
12	HM2_TestClock	T	HM2	Clock for ISPY-read mode
13	HM3_TestClock	T	HM8	Clock for ISPY-read mode
14	HM4_TestClock	T	HM4	Clock for ISPY-read mode
15	HM5_TestClock	T	HM5	Clock for ISPY-read mode
16	HM6_TestClock	T	HM1	Clock for ISPY-read mode
17	HM7_TestClock	T	HM7	Clock for ISPY-read mode
18	HM8_TestClock	T	HM3	Clock for ISPY-read mode
19	HM9_TestClock	T	HM9	Clock for ISPY-read mode
20	Merger_Clock	T	Merger	Back-end data clock
21	MOP_TestClock	T	MOP	Clock for OSPY-write mode

Table 3: Pin assignments (part 1) for bus HF_Ctrl(41:0), on which the Boot chip communicates with nearly everything else on the board.

Bit	Name	To/ From	Chip	Function
22	DAD0_Spare		DAD0	TBD
23	DAD1_Spare		DAD1	TBD
24	HM0_Spare		HM0	TBD
25	HM1_Spare		HM6	TBD
26	HM2_Spare		HM2	TBD
27	HM3_Spare		HM8	TBD
28	HM4_Spare		HM4	TBD
29	HM5_Spare		HM5	TBD
30	HM6_Spare		HM1	TBD
31	HM7_Spare		HM7	TBD
32	HM8_Spare		HM3	TBD
33	HM9_Spare		HM9	TBD
34	Merger_Spare		Merger	TBD
35	MOP_Spare0		MOP	TBD
36	MOP_Spare1		MOP	TBD
37	MOP_Spare2		MOP	TBD
38	MOP_Spare3		MOP	TBD
39	MOP_Spare4		MOP	TBD
40	VTM_Serial	B	P3	Unused VTM control
41	VTM_Reset*	T	P3	Unused VTM control

Table 4: Pin assignments (part 2) for bus HF_Ctrl(41:0), on which the Boot chip communicates with nearly everything else on the board.

	A	B	D	E
01	L0_D00	ground	ground	L2_D00
02	L0_D01	L0_D02	L2_D02	L2_D01
03	ground	L0_D03	L2_D03	ground
04	L0_D05	L0_D04	L2_D04	L2_D05
05	L0_D06	ground	ground	L2_D06
06	L0_D07	L0_D08	L2_D08	L2_D07
07	ground	L0_D09	L2_D09	ground
08	L0_D11	L0_D10	L2_D10	L2_D11
09	L0_D12	ground	ground	L2_D12
10	L0_D13	L0_D14	L2_D14	L2_D13
11	ground	L0_D15	L2_D15	ground
12	L0_D16	(L0_D16)	L2_D16	(L2_D16)
13	L0_D17	ground	ground	L2_D17
14	(L0_D17)	L0_D18	L2_D18	(L2_D17)
15	ground	(L0_D18)	(L2_D18)	ground
16	(L0_D19)	L0_D19	L2_D19	(L2_D19)
17	(L0_CAV*)	ground	ground	(L2_CAV*)
18	L0_DAV*	L0_LNKRDY*	L2_LNKRDY*	L2_DAV*
19	ground	(L0_LNKRDY*)	(L2_LNKRDY*)	ground
20	L0_STRBOUT	ground	ground	L2_STRBOUT
21	L0_SIGDETECT	L0_ERROR	(L2_ERROR)	L2_SIGDETECT
22	ground	(L0_ERROR)	L2_ERROR	ground
23	ground	ground	ground	ground
24	ground	ground	ground	ground

Table 5: P3 pin assignments (continued in Table 6). L0_D00..07 are B0L0 bits 0..7. L0_D08..15 are B0L1 bits 0..7. L0_D16..19 are B0L4 bits 0..3. L2_D00..07 are B1L0 bits 0..7. L2_D08..15 are B1L1 bits 0..7. L2_D16..19 are B1L4 bits 0..3. Pins whose names are in parentheses are not connected to the Hit Finder. STRBOUT is 53 MHz clock. DAV* is active-low "data valid" signal, used by Hit Finder to find event boundaries. ERROR indicates single-frame transmission error, flagged as an error by clustering engine. LNKRDY* is sent to MOP chip as active-high "lost lock" signal. SIGDETECT is connected to DAD chip but is unused.

	A	B	D	E
25	ground	ground	ground	ground
26	(L1_CAV*)	ground	ground	(L3_CAV*)
27	L1_DAV*	(L1_LNKRDY*)	(L3_LNKRDY*)	L3_DAV*
28	ground	L1_LNKRDY*	L3_LNKRDY*	ground
29	L1_STRBOUT	ground	ground	L3_STRBOUT
30	L1_SIGDETECT	L1_ERROR	L3_ERROR	L3_SIGDETECT
31	ground	(L1_ERROR)	(L3_ERROR)	ground
32	L1_D00	ground	ground	L3_D00
33	L1_D01	L1_D02	L3_D02	L3_D01
34	ground	L1_D03	L3_D03	ground
35	L1_D05	L1_D04	L3_D04	L3_D05
36	L1_D06	ground	ground	L3_D06
37	L1_D07	L1_D08	L3_D08	L3_D07
38	ground	L1_D09	L3_D09	ground
39	L1_D11	L1_D10	L3_D10	L3_D11
40	L1_D12	ground	ground	L3_D12
41	L1_D13	L1_D14	L3_D14	L3_D13
42	ground	L1_D15	L3_D15	ground
43	L1_D16	(L1_D16)	L3_D16	(L3_D16)
44	L1_D17	ground	ground	(L3_D17)
45	(L1_D17)	L1_D18	L3_D18	L3_D17
46	ground	(L1_D18)	(L3_D18)	ground
47	L1_D19	(L1_D19)	L3_D19	(L3_D19)

Table 6: P3 pin assignments (continued from Table 5). L1_D00..07 are B0L2 bits 0..7. L1_D08..15 are B0L3 bits 0..7. L1_D16..19 are B0L4 bits 4..7. L3_D00..07 are B1L2 bits 0..7. L3_D08..15 are B1L3 bits 0..7. L3_D16..19 are B1L4 bits 4..7. Pins C1–C35, C41–C44, and C47 are not connected. (Pin C47 is MODID, used by VRB to determine what type of auxilliary card is connected to it.) Pins C36–C40 are grounded. Pin C45 is bidirectional VTM_Serial I/O signal, connected to the Hit Finder Boot chip but currently unused. Pin C46 is VTM_Reset* signal, connected to the Boot chip but currently never asserted.

	L0_...		**L1_...**		**L2_...**		**L3_...**
0	D00	25	D00	50	D00	75	D00
1	D01	26	D01	51	D01	76	D01
2	D02	27	D02	52	D02	77	D02
3	D03	28	D03	53	D03	78	D03
4	D04	29	D04	54	D04	79	D04
5	D05	30	D05	55	D05	80	D05
6	D06	31	D06	56	D06	81	D06
7	D07	32	D07	57	D07	82	D07
8	D08	33	D08	58	D08	83	D08
9	D09	34	D09	59	D09	84	D09
10	D10	35	D10	60	D10	85	D10
11	D11	36	D11	61	D11	86	D11
12	D12	37	D12	62	D12	87	D12
13	D13	38	D13	63	D13	88	D13
14	D14	39	D14	64	D14	89	D14
15	D15	40	D15	65	D15	90	D15
16	D16	41	D16	66	D16	91	D16
17	D17	42	D17	67	D17	92	D17
18	D18	43	D18	68	D18	93	D18
19	D19	44	D19	69	D19	94	D19
20	LNKRDY*	45	LNKRDY*	70	LNKRDY*	95	LNKRDY*
21	ERROR	46	ERROR	71	ERROR	96	ERROR
22	DAV*	47	DAV*	72	DAV*	97	DAV*
23	STRBOUT	48	STRBOUT	73	STRBOUT	98	STRBOUT
24	SIGDTCT	49	SIGDTCT	74	SIGDTCT	99	SIGDTCT

Table 7: GRT_Data bus pin assignments. This bus connects the Data Alignment block to the Hit Processing block on the schematic.

	stream									
signal	0	6	2	8	4	5	1	7	3	9
d00	0	19	38	57	76	95	114	133	152	171
d01	1	20	39	58	77	96	115	134	153	172
d02	2	21	40	59	78	97	116	135	154	173
d03	3	22	41	60	79	98	117	136	155	174
d04	4	23	42	61	80	99	118	137	156	175
d05	5	24	43	62	81	100	119	138	157	176
d06	6	25	44	63	82	101	120	139	158	177
d07	7	26	45	64	83	102	121	140	159	178
d08	8	27	46	65	84	103	122	141	160	179
d09	9	28	47	66	85	104	123	142	161	180
d10	10	29	48	67	86	105	124	143	162	181
d11	11	30	49	68	87	106	125	144	163	182
d12	12	31	50	69	88	107	126	145	164	183
d13	13	32	51	70	89	108	127	146	165	184
d14	14	33	52	71	90	109	128	147	166	185
d15	15	34	53	72	91	110	129	148	167	186
clk	16	35	54	73	92	111	130	149	168	187
dav	17	36	55	74	93	112	131	150	169	188
err	18	37	56	75	94	113	132	151	170	189

Table 8: HM_Data bus pin assignments. The strange ordering of stream numbers is because streams (1,3) have been exchanged with streams (6,8) in their connections from Hit Clustering to Hit Merging. This exchange is expected to reduce occupancy correlations among streams sharing a common data path to the Merger. Streams are numbered from the Merger's perspective, not P3's perspective.

<table>
<tr><td>1
7</td><td>1
6</td><td>1
5</td><td>1
4</td><td>1
3</td><td>1
2</td><td>1
1</td><td>1
0</td><td>0
9</td><td>0
8</td><td>0
7</td><td>0
6</td><td>0
5</td><td>0
4</td><td>0
3</td><td>0
2</td><td>0
1</td><td>0
0</td></tr>
<tr><td colspan="2">not
used</td><td>E
E</td><td>L
C</td><td colspan="2">chip
(0–6)</td><td colspan="6">strip
(0–127)</td><td colspan="4">substrip
(0–15)</td></tr>
<tr><td colspan="2">not
used</td><td>E
E</td><td>T
D</td><td></td><td>I
D</td><td colspan="4"></td><td colspan="8">bunch ID</td></tr>
</table>

Table 9: Clustering engine output data format for a normal word (above) and an end-of-event word (below). EE is set for end-of-event word. LC is long-cluster flag. TD indicates truncated data. ID indicates invalid data. Unlabeled end-of-event bits are spare error bits, ignored by the MOP, which the HitMan currently fills with diagnostic data to supplement the two defined error bits.

0–17	See Table 9
18	Set if stream 0/5 read out
19	Set if stream 1/6 read out
20	Set if stream 2/7 read out
21	Set if stream 3/8 read out
22	Set if stream 4/9 read out
23	Clear: stream 0–4; set: stream 5–9
24	30 MHz clock
25	"Hold" (from FP, via MOP) to suspend output

Table 10: Merged_Data bus pin assignments.

0–17	See Table 9
18	0/5 empty*
19	0/5 full*
20	0/5 read-enable*
21	0/5 read clock
22	1/6 empty*
23	1/6 full*
24	1/6 read-enable*
25	1/6 read clock
26	2/7 empty*
27	2/7 full*
28	2/7 read-enable*
29	2/7 read clock
30	3/8 empty*
31	3/8 full*
32	3/8 read-enable*
33	3/8 read clock
34	4/9 empty*
35	4/9 full*
36	4/9 read-enable*
37	4/9 read clock

Table 11: HM_Afifoio, HM_Bfifoio bus pin assignments. Note that FIFO full* flags pass through Merger box on schematic but physically go straight to MOP.

0–22	See Table 2
23	Data Strobe 1
24	Hold 1
25	Data Strobe 2
26	Hold 2
27	DS LED 1
28	DS LED 2

Table 12: MOPped_Hits bus pin assignments.

A1	D00_	B1	D01_
A2	D00	B2	D01
A3	D02_	B3	D03_
A4	D02	B4	D03
A5	D04_	B5	D05_
A6	D04	B6	D05
A7	D06_	B7	D07_
A8	D06	B8	D07
A9	D08_	B9	D09_
A10	D08	B10	D09
A11	D10_	B11	D11_
A12	D10	B12	D11
A13	D12_	B13	D13_
A14	D12	B14	D13
A15	D14_	B15	D15_
A16	D14	B16	D15
A17	D16_	B17	D17_
A18	D16	B18	D17
A19	D18_	B19	D19_
A20	D18	B20	D19
A21	D20_	B21	EP_
A22	D20	B22	EP
A23	EE_	B23	DS
A24	EE	B24	DS_
A25	HOLD_	B25	ground
A26	HOLD	B26	ground

Table 13: SVT protocol connector pin assignments (for connector that is signal source).

Name	Color	Position	SVT req	'123	'00	External Net Name
Power	red	tiptop, L	Y	N	N	—
VME Ack	yellow	tiptop, R	Y	Y	N	Lights(0)
Boot Mode	red	neartop, L	N	N	N	Lights(4)
Load Mode	yellow	neartop, M	N	N	N	Lights(5)
Test Mode	green	neartop, R	N	N	N	Lights(6)
Strobe 1	green	over FP1, R	Y	Y	Y	MOPped_Hits(27)
Hold 1	red	over FP1, L	Y	Y	Y	—
Strobe 2	green	over FP2, R	Y	Y	Y	MOPped_Hits(28)
Hold 2	red	over FP2, L	Y	Y	Y	—
CDF Error (2 Hz = chips unconfigured)	red	bottom, R	Y	Y	Y	Lights(3)
SVT Error (2 Hz = config via bkup port) (1 Hz = G-link lost lock)	yellow	bottom, M	Y	Y	Y	Lights(2)
Run Mode	green	bottom, L	Y	N	N	Lights(1)

Table 14: Hit Finder front-panel LEDs. We add three LEDs that are not part of the SVT standard, to indicate whether the Hit Finder is in Boot, Load, or Test mode. The Ack, Boot, Load, Test, Run, CDF Error, and SVT Error LEDs are controlled by the Boot chip. The Strobe LEDs are controlled by the MOP. The Hold and Power LEDs' signals are generated locally on the Front Panel schematic. '123 indicates a one-shot to make the LED illuminate for long enough to be visible. '00 indicates a NAND (active-low OR) gate to illuminate the LED continuously if the corresponding signal is asserted continuously.

Bit	Name	Boot I/O	Function
0–5	AM0–AM5	I	Address modifiers
6	_AS	I	Address strobe
7	_BERR	O	Returns bus error to master
8	_delayed_DS	I	_vme_data_str after 10 nsec delay
9	_delayed_MODSEL	I	_MODSEL after 10 nsec delay
10	dir_trans	O	Switches data bus transceivers
11–12	_DS0–_DS1	I	Data strobes
13	_DTACK	O	Returns ack to master
14–18	_GA0–_GA4	I	Slot address within crate
19	_IACK	I	Interrupt acknowledge
20	_LWORD	I	
21	_MODSEL	O	Master is addressing us
22	_vme_data_str	O	Derived data strobe
23	_vme_write	I	VME read/write cycle switch

Table 15: Pin assignments for bus VME_ETC(23:0).

Device	Stream	Subaddr	What
Accessed via Boot chip			
0	0	0x0000	Brain register bit 8: enable Bkup_Config bit 7: assert HF_Freeze bits 6,5: test clock (30, 15, 7.5, vme) bits 4,3,2: test mode bits bits 1,0: (boot, test, run, load) mode
0	0	0x0001	FRAM boot base address
0	0	0x0002	Clocks VME test clock
0	0	0x0003	Strobes HF_Init signal
10	A(20:17)	A(16:1)	FRAM location A
11	A(20:17)	A(16:1)	FRAM location A+2^{20}
Accessed via HitMan chip			
1	0–9/15	A(11:0)	pedestal RAM location A
1	0–9/15	0x100N	chip ID N (0–7)
1	0–9/15	0x101N	strip threshold N (0–7)
1	0–9/15	0x102N	cluster charge cut
1	0–9/15	0x1100	ISPY counter (read/reset)
1	0–9/15	0x1101	set chip IDs to defaults (write)
1	0–9/15	0x1102	max # clusters
1	0–9/15	0x1103	$\# - 1$ expected chip IDs
2	0–9/15	A(15:0)	ISPY location A
3	0–9/15	A(15:0)	CRAM location A
4	0–9/15	A(15:0)	CRAM location A+2^{16}
5	0–9/15	any	FIFO (write)
Accessed via Merger chip			
5	0–9	any	FIFO (read)
6	any	0x0000	stream disable mask
6	any	0x8000	FIFO empty* flags

Table 16: VME address space (part 1).

Device	Stream	Subaddr	What
Accessed via MOP chip			
7	0	0x0000	stream disable mask
7	0	0x100N	barrel/layer map N (0-9)
7	0	0x1100	OSPY counter
7	0	0x1200	reset EE word error flags
7	0	0x1201	reset error register
7	0	0x1210	EE word error mask (15:0)
7	0	0x1211	EE word error clear (15:0)
7	0	0x1212	CDF error mask (15:0)
7	0	0x1213	SVT error mask (15:0)
7	0	0x1214	error register (15:0)
7	0	0x1215	local error register (15:0)
7	0	0x1220	EE word error mask (31:16)
7	0	0x1221	EE word error clear (31:16)
7	0	0x1222	CDF error mask (31:16)
7	0	0x1223	SVT error mask (31:16)
7	0	0x1224	error register (31:16)
7	0	0x1225	local error register (31:16)
7	0	0x1230	EE word error mask (43:32)
7	0	0x1231	EE word error clear (43:32)
7	0	0x1232	CDF error mask (43:32)
7	0	0x1233	SVT error mask (43:32)
7	0	0x1234	error register (43:32)
7	0	0x1235	local error register (43:32)
8	0	A(15:0)	OSPY location A
9	9	0x9999	DIP switch bank

Table 17: VME address space (part 2).

Bit	Name	Function
0	HF_VME_Spare	TBD
1	HF_VME_Write	1=write cycle; 0=read cycle
2	HF_VME_DS	clocks data to/from data bus
3	HF_VME_AS	activates address decoding logic

Table 18: Pin assignments for bus HF_VME_Ctrl(3:0).

0	nCONFIG	$1 \rightarrow 0 \rightarrow 1$ initiates config
1	CONF_DONE	0 if chip not configured (wired OR)
2	nSTATUS	reply to nCONFIG transitions
3	DCLK	serial clock
4	DATA0	serial data
5	nCE	daisy-chain input token
6	nCEO	daisy-chain output token

Table 19: Passive-serial configuration bus pin assignments. Boot_Config and Bkup_Config buses omit pins 5,6 since they are not chained. Main 10K50 chain order is MOP, HM0, HM6, HM2, HM8, HM4, HM5, HM1, HM7, HM3, HM9, DAD0, DAD1, which means that MOP's nCE is grounded, MOP's nCEO goes to HM0's nCE, HM0's nCEO goes to HM6's nCE, ..., and DAD1's nCEO floats.

0	TCK
1	TDO
2	TMS
3	TDI

Table 20: Merger_Config pin assignments for configuration through JTAG port.

Bit	Name	P2 pin	Type	Function
0	SVT_INIT*	A1	input	Prepare for data taking
1	SVT_ERROR*	A2	o/c output	Trigger SPY cycle
2	SVT_FREEZE*	A3	input	Allow SPY VME access
3	SVT_LOSTLOCK*	A4	o/c output	Trigger G-link reset
4	SVT_SPARE*	A5	input	TBD
5	CDF_ERROR*	A26	o/c output	Wake up Run_Control

Table 21: Pin assignments for bus P2_SlowCtrl(5:0).

Connector	Volts	Pins
P0	+5.0	A1 B1 C1 C2 D1 E1
P1	+5.0	A32 B32 C32
P1	+3.3	D12,14,16,18,20,22,24,26,28,30
P2	+5.0	B1 B13 B32

Table 22: Power pin connections. The Hit Finder uses all available +5.0V and +3.3V power pins. At 60°C, the P0 pins are rated at 1.2A/pin and the P1,2 pins are rated at 1.25A/pin. +5.0V power is shared with the VTM (aux card).

Mode	Amps (+5V)	Amps (+3.3V)
Idle	0.5	1
Running from VTM		2
Testing from ISPY	1.5	4
Unconfigured		3–6

Table 23: Current drawn from each power supply when idle (load mode), when testing with ISPY as data source, when running with VTM as data source, and when Altera chips are not yet configured.

TC	Signal
TC5	dsdelayin
TC5	hf_config(4:0)
TC5	bkup_config(4:0)
TC5	boot_config(4:0)
TC6	_MODSEL
TC6	_LWORD
TC6	_DTACK
TC6	_DS(1:0)
TC6	dir_trans
TC6	_delayed_MODSEL
TC6	_delayed_DS
TC6	_BERR
TC6	_AS
TC6	AM(5:0)
TC7	framdata(15:0)
TC8	framaddress(16:1)
TC9	HF_VME_Data(31:16)
TC10	HF_VME_Data(15:0)
TC11	HF_VME_Addr(15:0)
TC12	HF_VME_AS
TC12	HF_VME_DS
TC12	HF_VME_Write
TC12	HF_VME_Spare
TC12	HF_Load
TC12	HF_Freeze
TC12	HF_Init
TC12	HF_VME_Addr(24:16)
TC13	VME_Data(31:16)
TC14	VME_Data(15:0)
TC15	VME_Addr(31:24)
TC15	VME_Addr(7:2)
TC15	_vme_data_str
TC15	_vme_write
TC16	VME_Addr(23:8)

Table 24: Signals probed by test connectors (part 1).

TC	Signal
TC1	HM_Data(91:76) (Stream 4)
TC2	HM_Data(186:171) (Stream 9)
TC3	2 DAD clock outputs
TC3	6 DAD Valid outputs
TC3	4 DAD Error outputs
TC3	4 Lost_Lock signals
TC17	Merged_Data(15:0)
TC18	Merged_Data(25:16)
TC18	Merger_Clock
TC18	MOP_TestClock
TC18	HF_Test1
TC18	HF_Test2
TC18	Merger_Spare
TC18	HF_Spare

Table 25: Signals probed by test connectors (part 2).

Stage	Δt
DAD	130 nsec
HitMan	950 nsec
FIFO	100 nsec
Merger	60 nsec
MOP	240 nsec
Total	1.5 μsec

Table 26: Hit Finder latency (first input to first output). Values were measured in simulation for one particular event, not averaged in any way.

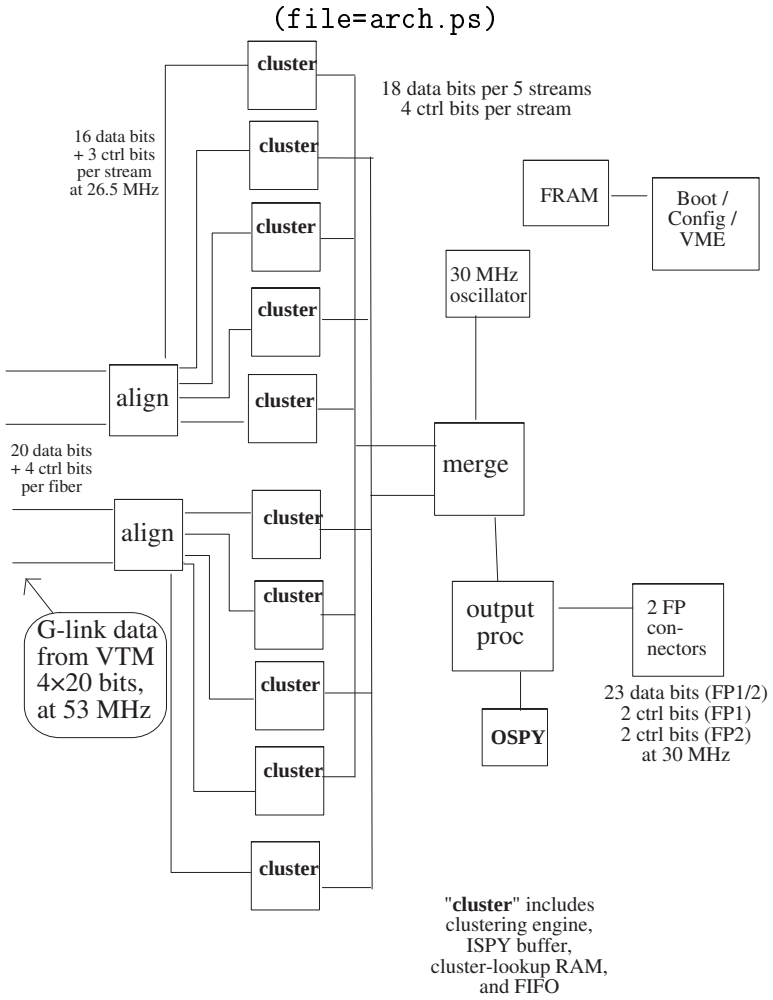

Figure 2: Data-flow cartoon.

(file=hfsheet01.ps)

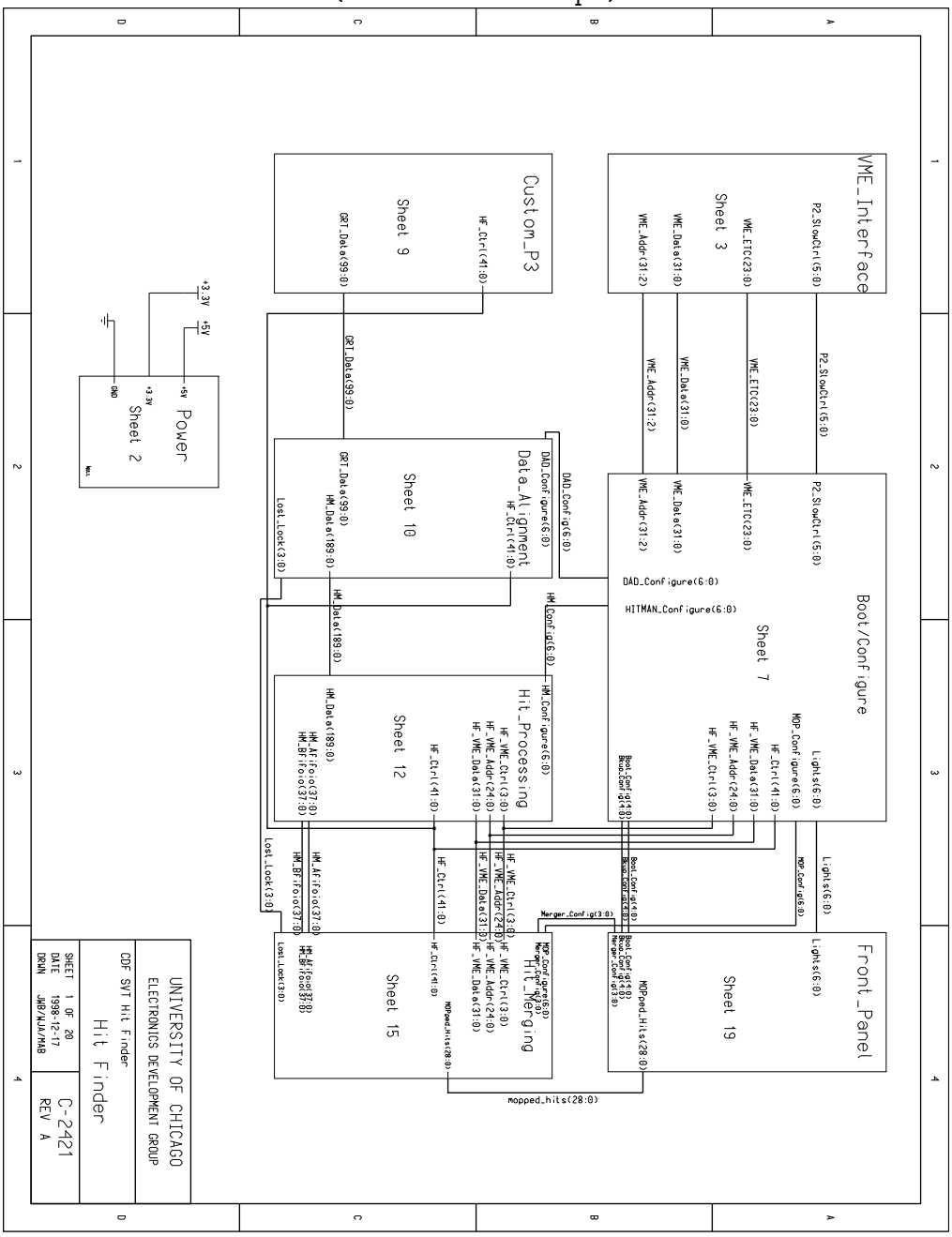

Figure 3: Hit Finder top-level schematic. Descriptions of nearly all of the buses listed on this top-level schematic can be found scattered among various tables in this note.

(file=layout.ps)

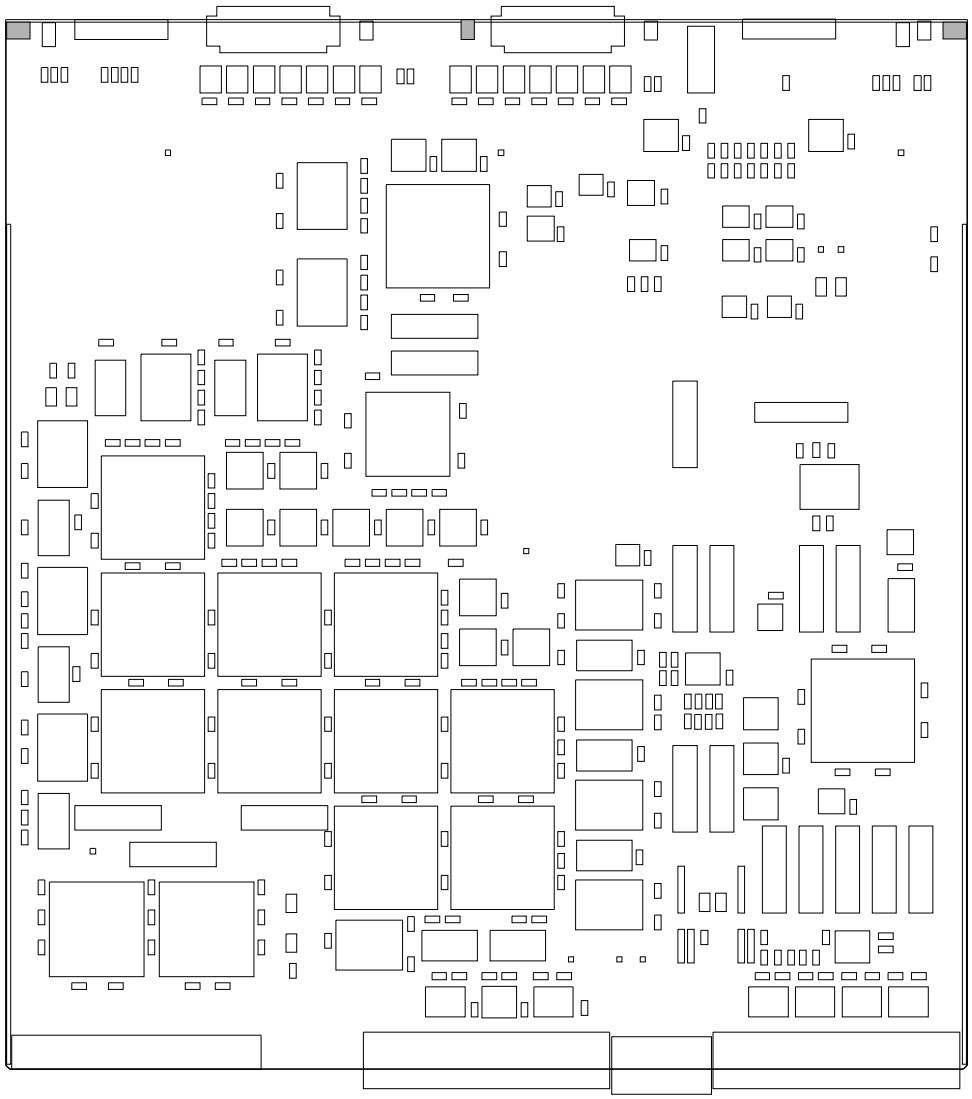

Figure 4: Hit Finder board layout.

(file=hfsheet13.ps)

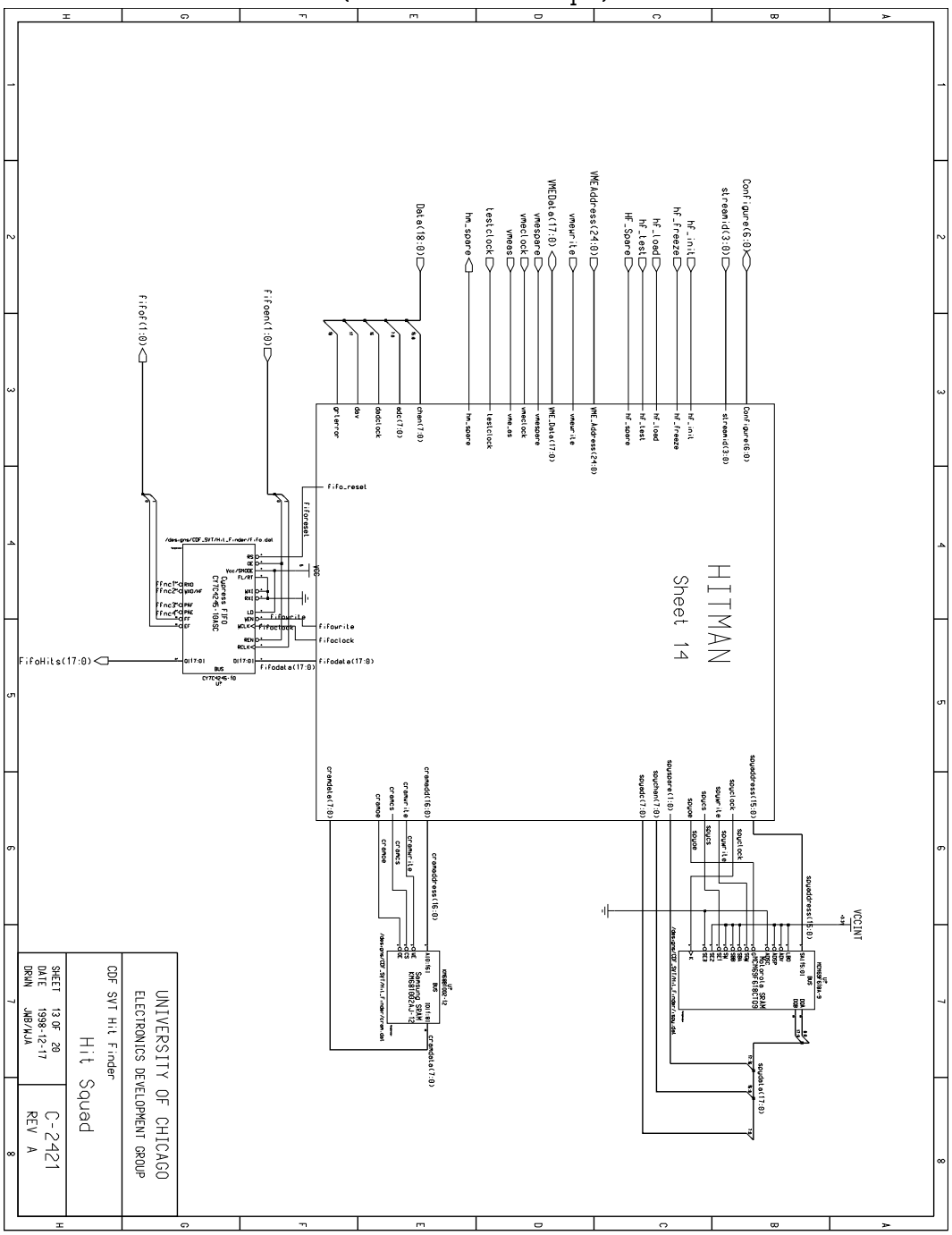

Figure 5: Schematic for one clustering engine.

(file=hfsheet12.ps)

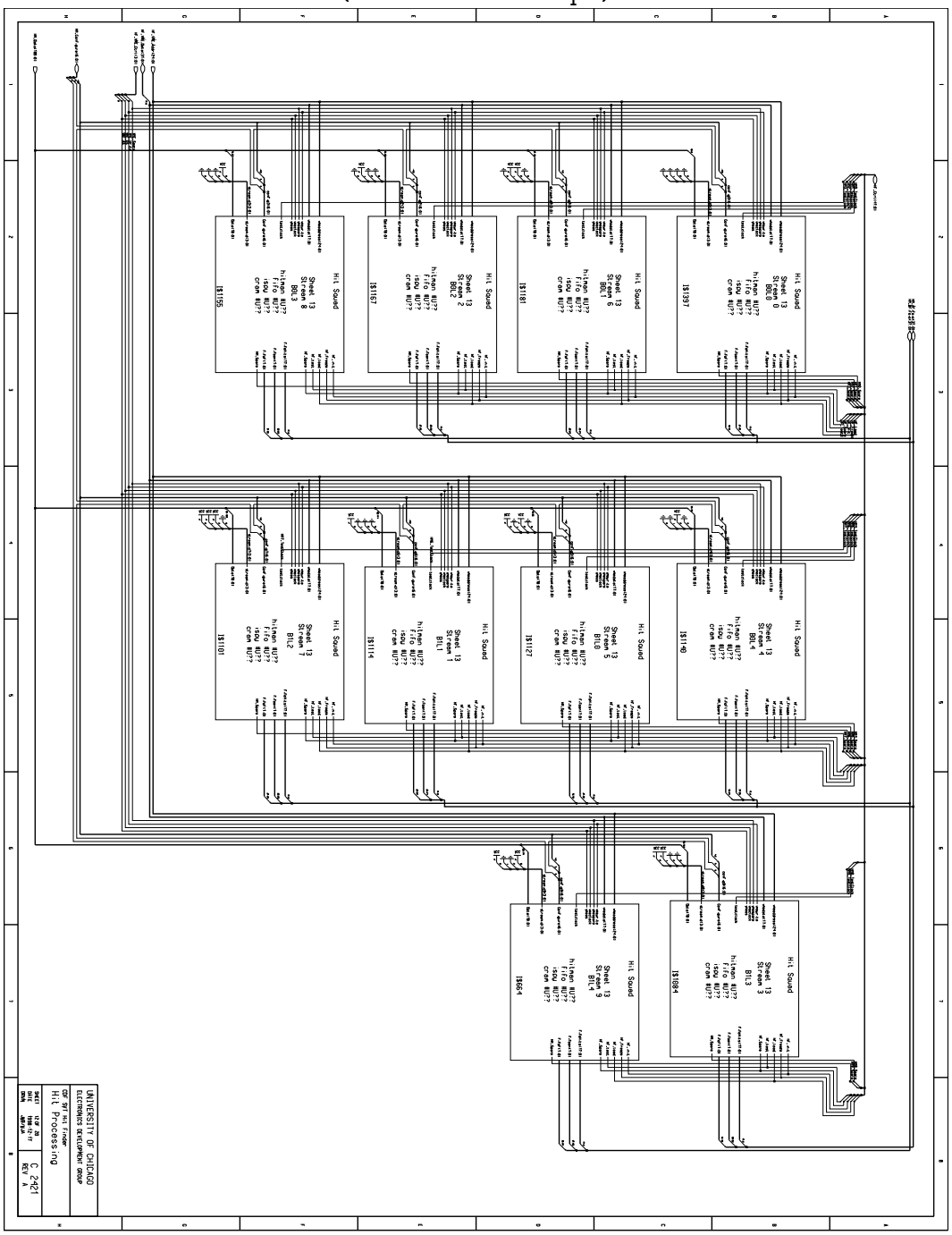

Figure 6: Hit Processing sheet of schematic.

(file=hfsheet15.ps)

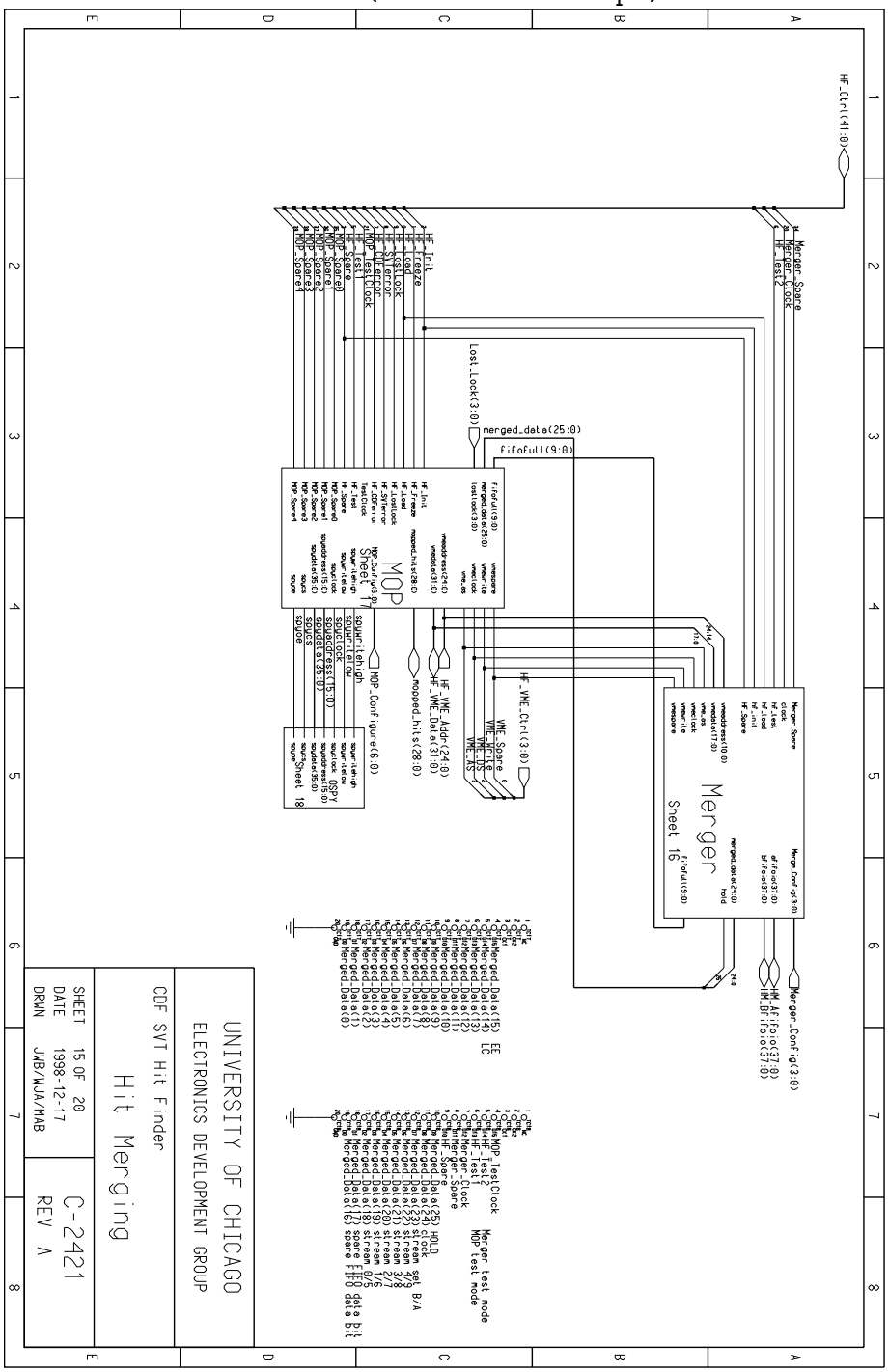

Figure 7: Hit Merging sheet of schematic.

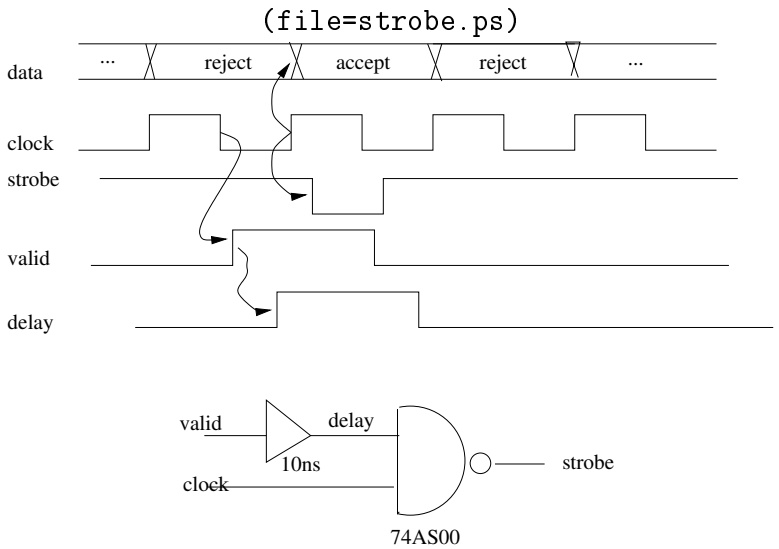

Figure 8: Data strobe generation. The MOP outputs a clock and a Valid signal. External logic generates Data Strobe (called DS_ in the SVT protocol document [14]). According to the protocol, the quiescent state must be high, and the data must be stable for > 6 nsec before the positive DS_ edge and > 10 nsec after the positive DS_ edge. By approximately centering the positive edge within the data, we meet these specifications.

(file=hfsheet19.ps)

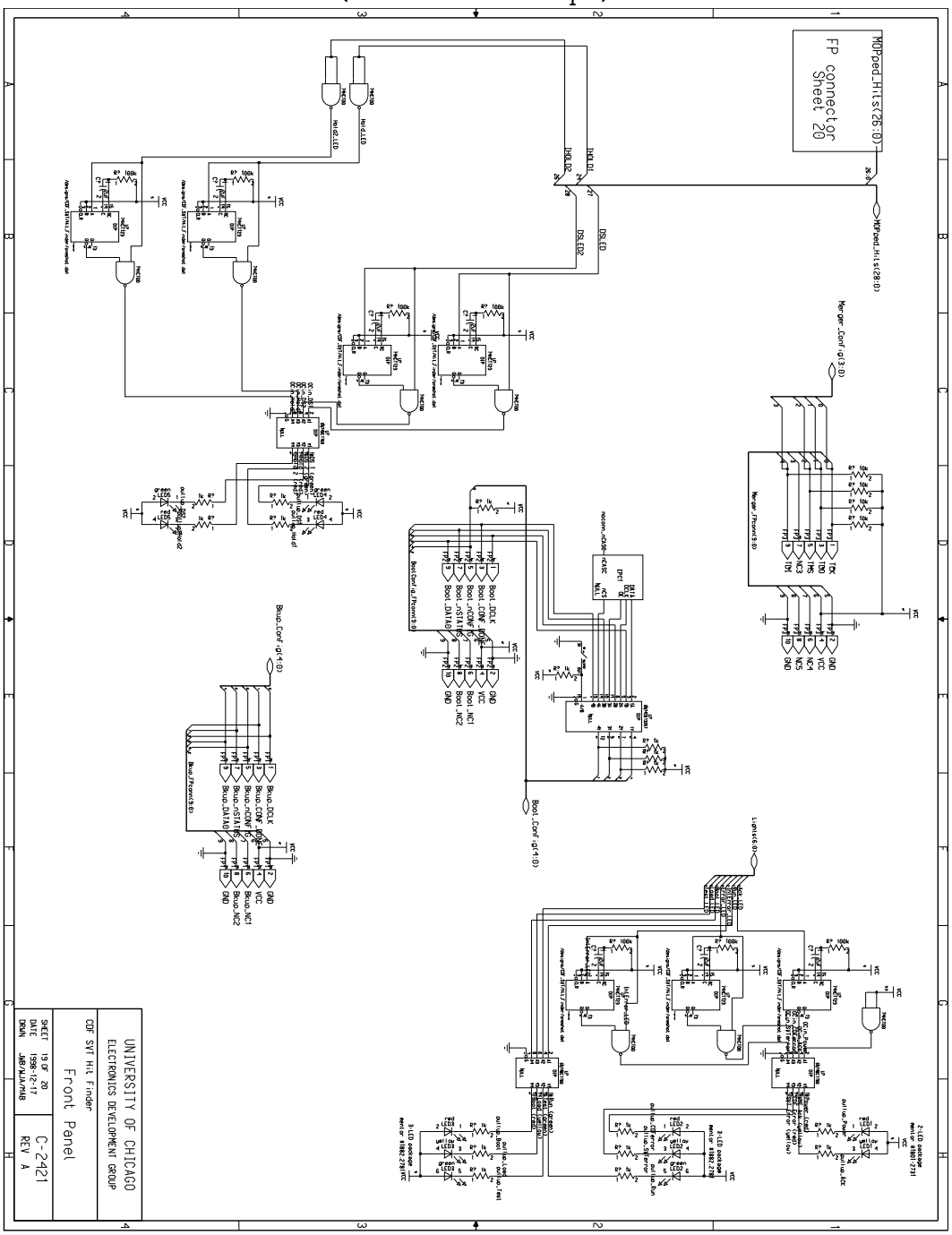

Figure 9: Hit Finder Front Panel schematic.

(file=hfsheet20.ps)

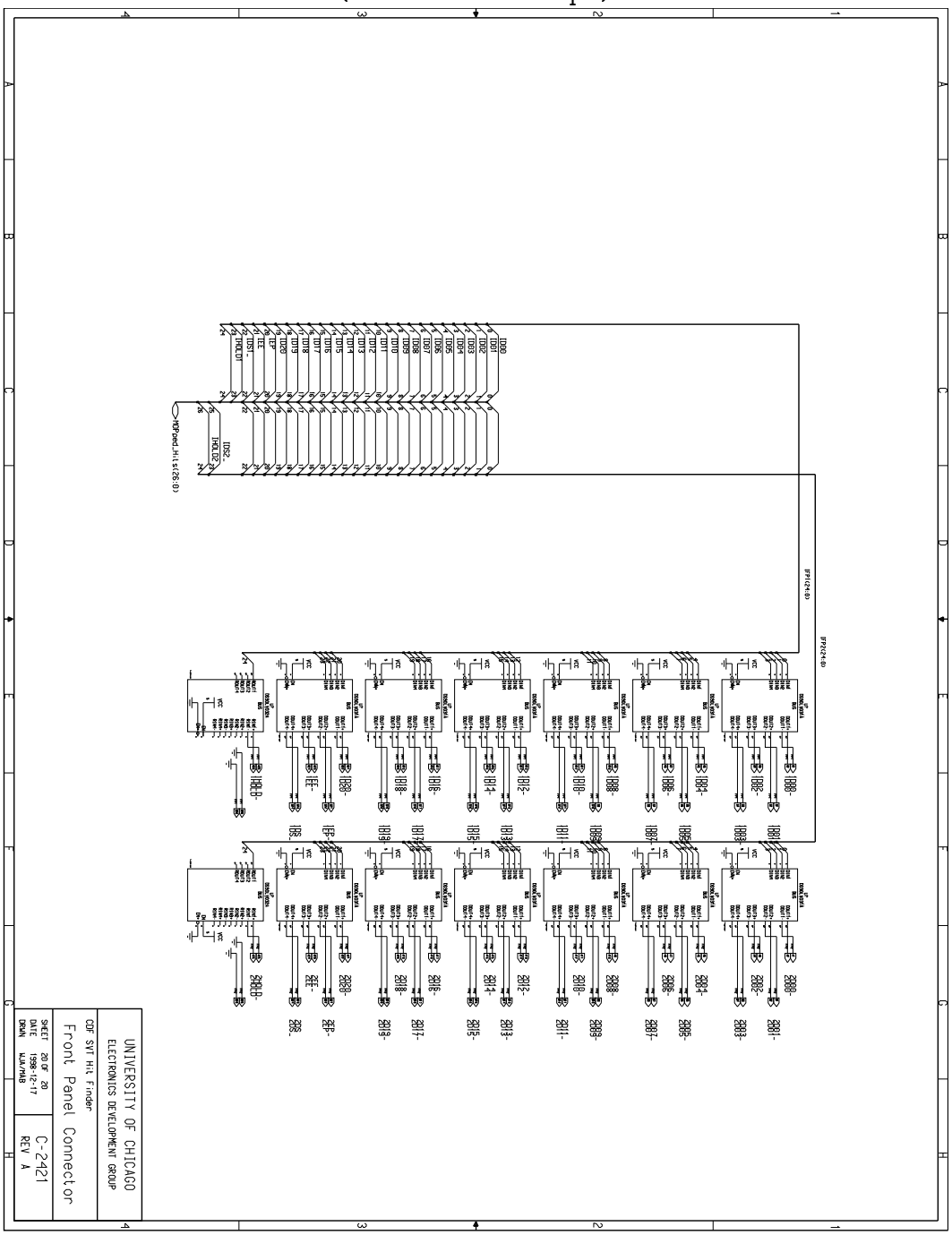

Figure 10: Hit Finder Front Panel Connectors schematic.

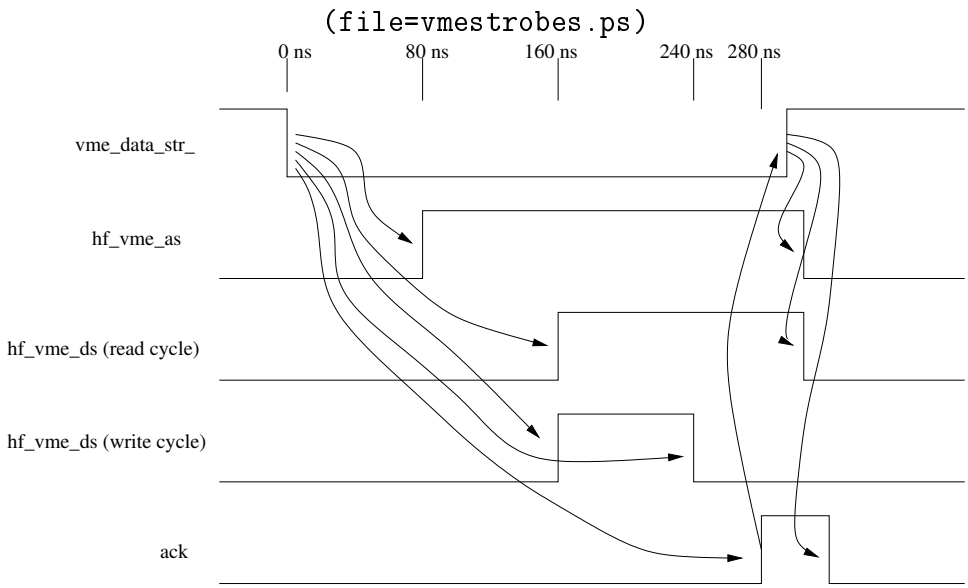

Figure 11: Timing of strobe signals for HF VME I/O.

(file=parts.ps)

	SVT Hit Finder Parts List		Revised 1999-01-11 by WJA									
Purpose	**Vendor**	**Part Number**	**Description**	**Package**	**# to order**	**$/order**	**#/board**	**$/unit**	**$/board**	**# spare**	**Comment**	**When?**	**In?**
DAD	Altera	EPF10K30AQC240-1	FPGA	PQFP 240	5	530	2	106	212	1		1998-10-21	Y
Hitman/MOP/Boot	Altera	EPF10K50VBC356-2	FPGA	BGA 356	26	3406	12	131	1572	2		1998-10-21	Y
VME Interface	Altera	EPM7128SQC160-7	CPLD	PQFP 160	0	0	0	43	0		donated 3 to Track Fitter	1998-10-21	Y
Merger (original)	Altera	EPM7256AQC208-7	CPLD	PQFP 208	0	0	0	83	0		returned 3 to Wyle	1998-10-21	R
Merger (upgrade)	Altera	EPM7512AEQC208-7	CPLD	PQFP 208	3	474	1	158	158	1		1999-01-08	N
Boot (original)	Altera	EPM9560ABC356-10	CPLD	BGA 356	0	0	0	150	0	1	returned 3 to Wyle	1998-10-21	R
FIFO	Cypress	CY7C4245-10ASC	FIFO	A64 (10x10 TQFP 64)	22	880	10	40	400	2		1998-10-21	Y
VME DS/ack delay	Data Delay Devices	DDU7C-400	10 tap 400ns delay line	DIP 16	3	60	1	20	20			1998-10-21	Y
VME interf delay line	Data Delay Devices	MDU38F-10	10ns delay	DIP 8	5	100	1	20	20			1998-10-21	Y
MOP clock socket	Digikey	A463-ND	Socket for 4-pin oscillator	DIP 8	3	3	1	1	1		Aries (half-size)	1998-10-21	Y
MOP clock (slow)	Digikey	SE1243-ND	25.576 MHz Oscillator	DIP 8	1	3	0	3	0	1	Epson #SG-531P-25.576MC	1998-10-21	Y
MOP clock	Digikey	SE1822-ND	30.000 MHz Oscillator	DIP 8	3	9	1	3	3		Epson #SG-531PTJ-30.000MC	1998-10-21	Y
MOP clock (fast)	Digikey	SE1828-ND	36.000 MHz Oscillator	DIP 8	1	3	0	3	0	1	Epson #SG-531PTJ-36.000MC	1998-10-21	Y
VME receivers	IDT	74FCT541ASO	Octal buffer/receiver	SOIC 20	12	0	4					1998-10-21	Y
LVDS drivers	National	DS90C031TM	quad LVDS driver	M16A (SOP 16)	27	216	12	8	96			1998-10-21	Y
LVDS receiver	National	DS90C032TM	quad LVDS receiver	M16A (SOP 16)	5	40	2	8	16			1998-10-21	Y
clock/strobe gate	Philips	74HCT08	Quad AND gate	SOIC 14	5	0	1					1998-10-21	Y
VME transceivers	TI	SN74ABTE16245DL	16 bit transceiver	SOIC 48	8	0	2					1998-10-21	Y
VME o/c buffer	TI	SN74BCT760DW	Octal O/C buffer	SOIC 20	8	0	2					1998-10-21	Y
Flash RAM	Intel	DA28F320J5-100	StrataFlash FRAM	SSOP 56	3	60	1	20	20			1998-10-22	Y
ISPY/OSPY	Motorola	MCM69F618CTQ9	BurstRAM 64Kx18	TQFP 100	30	450	12	15	180			1998-11-05	Y
CRAM	Samsung	KM681002AJ-12	CMOS SRAM 128Kx8	32-SOJ-400	25	106.25	10	4.25	42.5			1998-11-05	Y
Spare delay lines	Data Delay Devices	MDU38F-10	10ns delay	DIP 8	5	100	1	20	20			1998-11-05	Y
PS config delay line	Data Delay Devices	MDU38F-50	50ns delay	DIP 8	5	100	0	20	0			1998-11-05	Y
LED stabilizer	Philips	74HCT123D	Monostable	SO16	20	0						1998-11-05	Y
Misc logic	Philips	74HCT00D	Quad 2-input NAND	SO14	20	0						1998-11-05	Y
Boot clock	Digikey	SE1217-ND	2.000 MHz Oscillator	DIP 8	3	9	0	3	0		Epson #SG-531P-2.000MC	1998-11-16	Y
Boot clock socket	Digikey	A463-ND	Socket for 4-pin oscillator	DIP 8	3	3	0	1	0		Aries (half-size)	1998-11-16	Y
P0 connector	ERNI	#64784	95-pin connector		2		1				from Fermilab		
P1/2 connectors	Harting	#0201 160 2101	160-pin connector		4		2				from Fermilab		
P5 connector	ERNI	#64785	110-pin connector		2		1				from Fermilab		
P6 connector	ERNI	#64179	125-pin connector		2		1				from Fermilab		
FP connectors	KEL	#8822E-052-171H	connector		4		2				from Trieste		
Logic probe connectors	3M	#2520-6002	20-pin header	.100" × .100" low-profile			17						
Fuses	Littelfuse		Fuse	Axial Lead									
decoupling capacitors?													
FP LEDs (bottom)													
FP LEDs (top)													
FP LEDs (top)													
pullup resistors?													
Per-board parts price	2760.5												
Total $ parts ordered	6552.25												

Figure 12: Parts list spreadsheet.

(file=hfsheet03.ps)

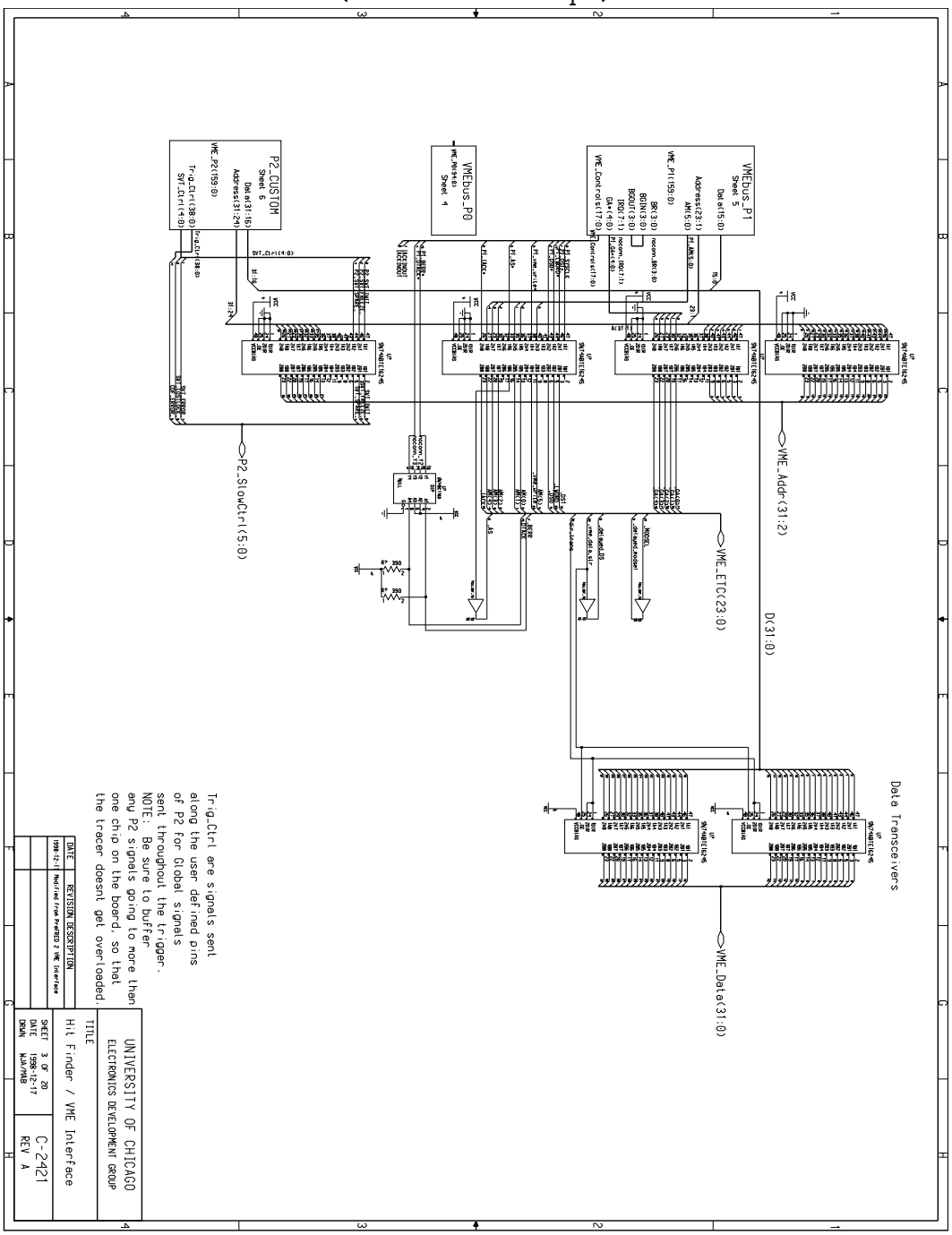

Figure 13: Hit Finder VME Interface schematic.

(file=hfsheet07.ps)

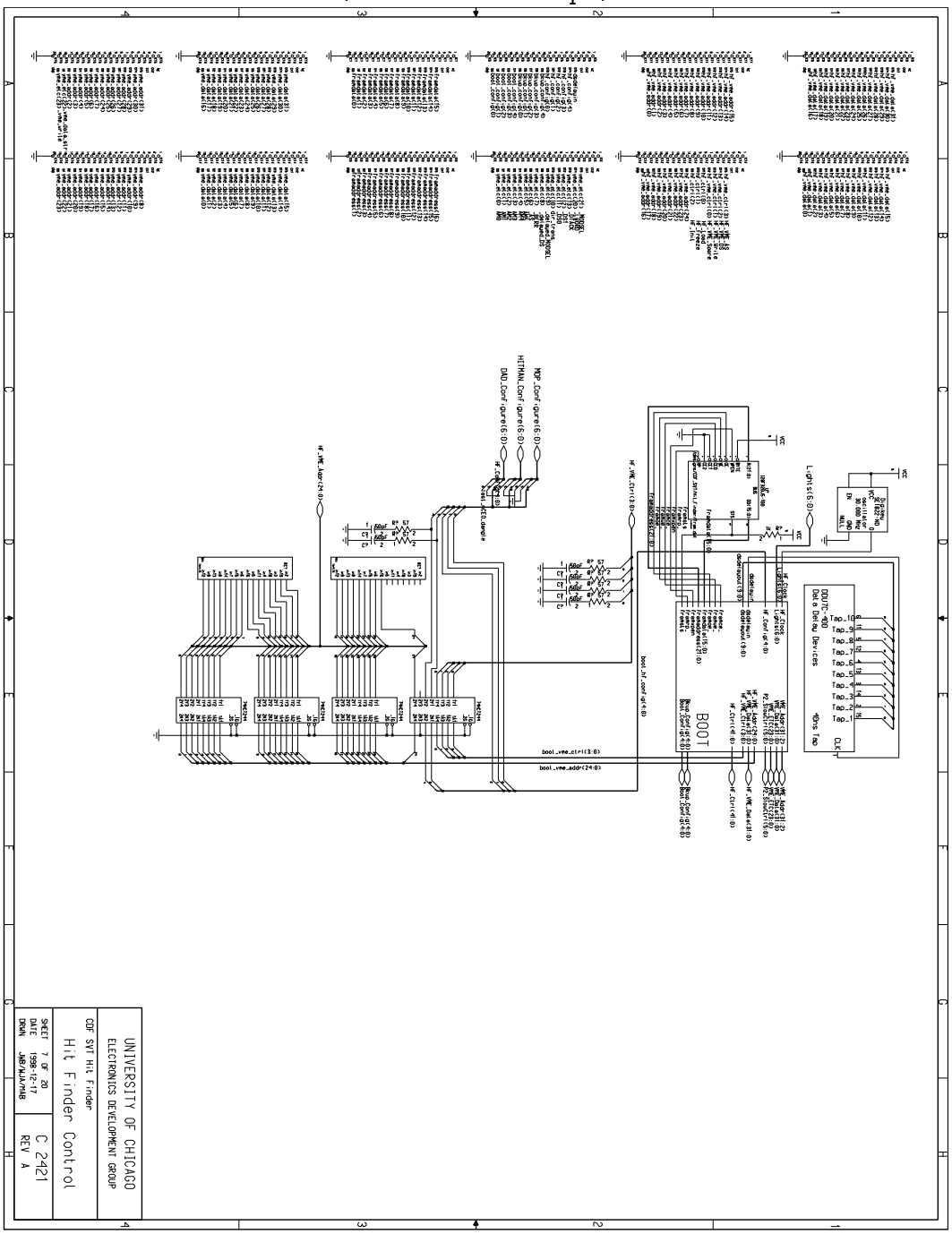

Figure 14: Hit Finder Boot/Configure schematic.

List of Tables

1 SVX-II raw data format 14
2 Hit Finder output format 15
3 HF_Ctrl bus pin assignments (part 1) 16
4 HF_Ctrl bus pin assignments (part 2) 17
5 P3 pin assignments (part 1) 18
6 P3 pin assignments (part 2) 19
7 GRT_Data bus pin assignments 20
8 HM_Data bus pin assignments 21
9 Clustering engine output format 22
10 Merged_Data bus pin assignments 23
11 HM_Afifoio, HM_Bfifoio bus pin assignments 24
12 MOPped_Hits bus pin assignments 25
13 SVT cable pin assignments for signal source 26
14 Front-panel LEDs 27
15 VME_ETC bus pin assignments 28
16 VME address space (part 1) 29
17 VME address space (part 2) 30
18 HF_VME_Ctrl bus pin assignments 31
19 Passive-serial configuration bus pin assignments 32
20 Merger_Config bus pin assignments 33
21 P2_SlowCtrl bus pin assignments 34
22 Power pins 35
23 Current 35
24 Signals probed by test connectors (part 1) 36
25 Signals probed by test connectors (part 2) 37
26 Hit Finder latency 37