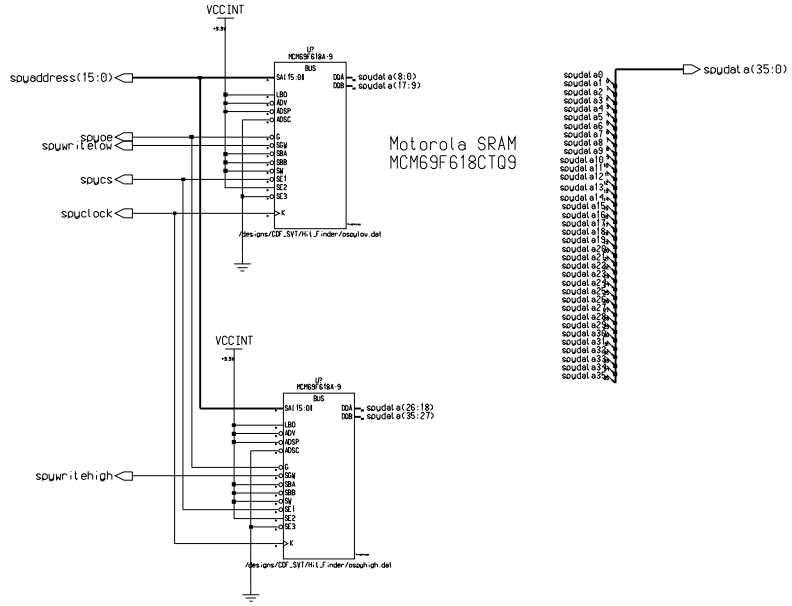

UNIVERSITY OF CHICAGO
ELECTRONICS DEVELOPMENT GROUP

CDF SVT Hit Finder

OSPY

SHEET 18 OF 20 DATE 1998-12-17 DRWN WJA	C-2421 REV A