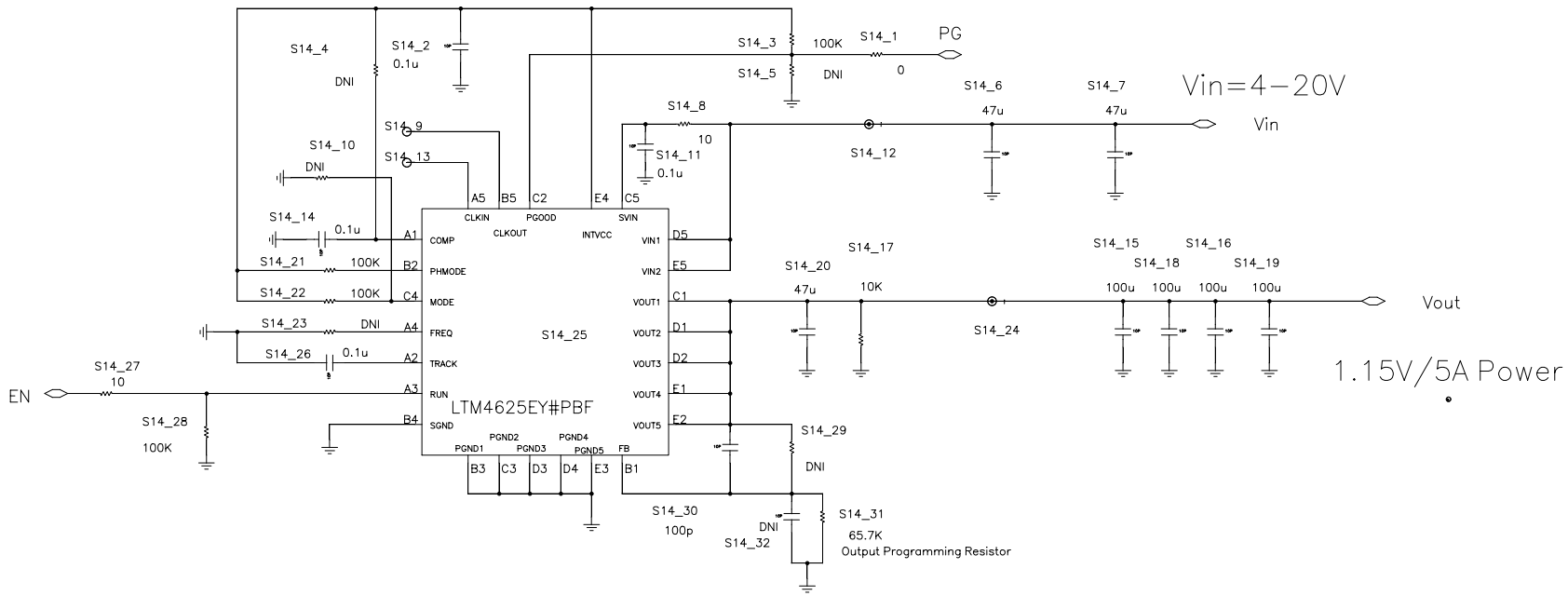

Engineer: M. Bogdan	The University of Chicago	
Drawn by: M. Bogdan	1.15V/5A Power Supply 500MHz 16 Ch ADC Module	
DATE: 1/6/2022		
SPC# 3004 ASM# 3005	REV. A	DRW. 3003 Sheet 14